Linear Actuators

Electric Solutions that Deliver Smarter, Stronger and Sturdier Performance to Demanding Applications

www.thomsonlinear.com

THOMSON®
A REGAL REXNORD BRAND

Thomson – Engineering Linear Motion for a Rapidly Evolving World

From precision linear motion solutions to fully integrated actuation systems, Thomson delivers intelligent, clean and efficient motion to help customers compete and scale. Whether your application demands speed, load capacity, controllability, compact design or long-term reliability, we help you design the right solution, not just the right part.

Thomson stands apart through:

- One of the industry's most comprehensive portfolios of linear motion and actuation solutions.
- Engineered-to-fit solutions, from configurable standards to application-specific designs developed in close collaboration with your team.
- Eighty years of proven application expertise across medical, industrial automation, aerospace and defense, mobile off-highway, material handling, transportation, robotics and more.

Engage with our engineering teams early to reduce design cycles, improve system integration and maximize long-term value. Product and application information, 3D models, sizing and selection tools, and global contact information are available at thomsonlinear.com

As a leading brand of Regal Rexnord, Thomson uniquely connects linear and actuation solutions with motors, controls, power transmission and drive technologies for enabling smarter integration, expanded design flexibility and enterprise-level support worldwide. Together with Regal Rexnord's 30,000 associates around the world, we help create a better tomorrow with sustainable solutions that power, transmit and control motion.

Local Support Around the Globe

Table of Contents

Introduction **4**
Why Convert to Electric Actuators? 4
Why Choose a Thomson Actuator? 6
Smart Actuators 8
Smart Modular Onboard Controls 10
Applications 12
Online Sizing and Selection Tools 16
On the Front Line Since 1967 18

Performance Overview **20**

Linear Actuators **28**
Electrak® XD 28
Electrak HD 44
Electrak LL 60
Electrak MD 70
DMHD 80
Electrak GX DC 92
Electrak GX AC 102
Electrak LA14 114
Electrak LA24 122
B-Track IC DC (with integrated controls) 132
B-Track IC AC (with integrated controls) 140
B-Track DC 146
B-Track AC 152
H-Track 158
Electrak 1 S 170
Electrak 1 SP (with feedback potentiometer) 176
M-Track 182
Electrak 050 188
Max Jac® 194
Electrak Throttle 200
Electrak PPA 208
DMD 216
DMA 222
LM80-H 228
LM80-V 234

Glossary **240**

= SMART ACTUATOR

Why Convert to Electric Actuators?

There are many reasons to switch from pneumatic or hydraulic actuators to electric solutions. Improved controllability, reduced system complexity and a smaller footprint are often the primary drivers. These advantages are complemented by lower energy consumption, cleaner operation and reduced maintenance, along with additional benefits such as improved performance, reduced downtime, and faster assembly and commissioning.

Better Controllability

An electric motor paired with a lead or ball screw is significantly easier to implement than a pneumatic or hydraulic cylinder, as it typically requires little more than electrical power to operate. Electric actuators are easier to control, responding faster, delivering greater accuracy, and eliminating creep at standstill or during power-off. They are also readily equipped with onboard feedback and control capabilities, enabling straightforward integration with higher-level systems.

Reduced Costs and Improved Sustainability

Electric actuators deliver measurable cost and sustainability benefits, including:

- Increased energy efficiency and environment-friendly features
- No need for costly compressors and the supporting infrastructure
- Cleaner and safer to use in places sensitive to contamination
- No risk of leaks – small, undetected leakages add hidden costs, while larger leaks can be hazardous, messy and costly
- No maintenance required, reliable and easy to replace if necessary
- Quick and simple to install and commission

ELECTRIC LINEAR ACTUATORS

IMPROVE

EFFICIENCY
RELIABILITY
PRODUCTIVITY
PERFORMANCE
CONTROLLABILITY

REDUCE

COMPLEXITY
ENGINEERING
COMPONENTS
OVERALL COSTS
INSTALLATION TIME

Reduced Complexity and Smaller Footprint

The illustration below compares three common approaches for operating an electric actuator, a pneumatic cylinder and a hydraulic cylinder. As shown, both pneumatic and hydraulic options require more complex, space-intensive solutions that add weight and maintenance to the overall system when compared to electric actuators.

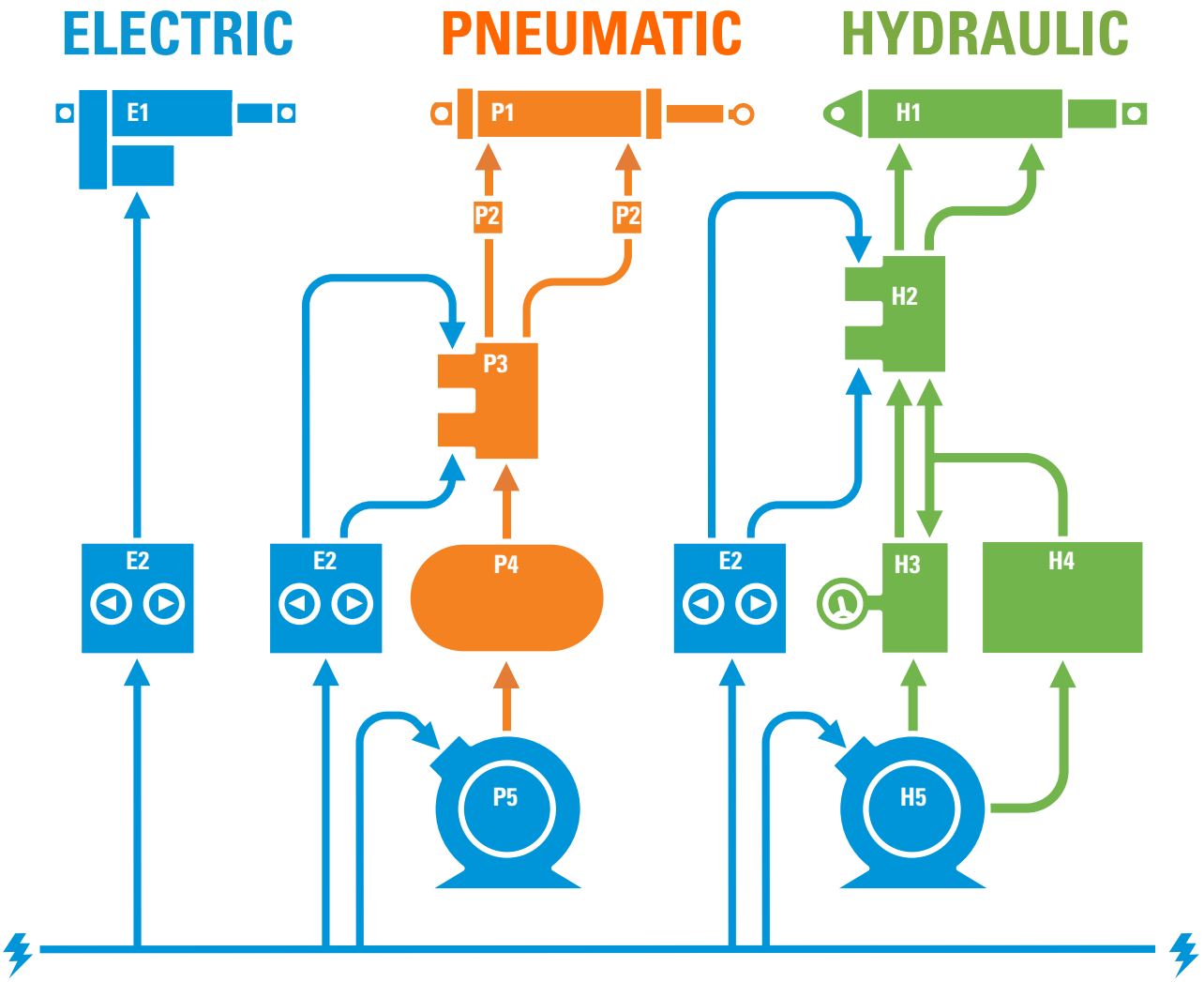

E1. Electric linear actuator
E2. Electric switches

P1. Pneumatic cylinder
P2. One-way flow control valves
P3. Bidirectional valve
P4. Compressed air tank
P5. Pneumatic air compressor

H1. Hydraulic cylinder
H2. Bidirectional valve
H3. Pressure relief valve
H4. Hydraulic oil reservoir tank
H5. Hydraulic oil compressor

Why Choose a Thomson Actuator?

Electric actuators are versatile, easy to use and affordable compared to most alternatives. As long as electric power is available, there is likely a suitable Thomson actuator for the job. The latest generation of actuators are smarter, stronger and sturdier, and have created new possibilities. A standard Thomson actuator can do things today that not long ago were considered too expensive or even impossible to do.

Employing a Thomson electric actuator simplifies the transition from manual to powered motion since electricity is readily available. It doesn't matter if power comes from the grid, a battery or any other source since Thomson offers both AC and DC actuators in the most common voltages. Plug it in and run - it is that simple.

Clean, Maintenance-Free and Cost-Effective Operation

Thomson actuators are inherently clean since there are no messy compressors, filters, oils or other mediums involved. Most of them are, in fact, clean enough to be used right out of the box in areas sensitive to contamination. Thomson electric actuators are also completely maintenance free - there is no need to remember to check or replace anything, and they don't carry hidden ownership costs, sparing you of any unpleasant surprises throughout their lifetime.

Smaller, Stronger and Tougher

Electric motors, drives, batteries and electronic controls have significantly advanced over the past several decades. At the same time, actuators have become better sealed and more robust. These improvements have allowed Thomson to make stronger, smarter and more compact actuators. Our Electrak® XD, HD, LL and MD families represent the pinnacle of modern actuator design. You can

Modern actuators can work in almost any environment

now find Thomson actuators working in the most demanding environments – whether it be hot, cold, dusty, dirty, humid or wet. When it comes to the unique H-Track electro-hydraulic actuator, even applications submerged in water are possible.

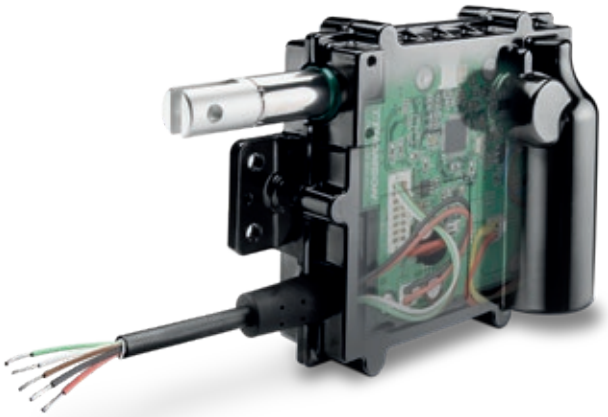

Wide Range of Electric Actuators

Not all applications require the most advanced solutions. Many times simpler is better, and with the wide range of actuators offered by Thomson, you are likely to find the ideal solution. Compact Electrak S, SP, M-Track and E050 models can be used where space is limited or loads are low. Electrak LA and B-Track are work horses that will perform tirelessly almost everywhere. Actuators such as H-Track, Electrak Throttle, LL and Max Jac are designed to excel in specific applications, while Electrak GX is a cost-efficient alternative.

Smart Actuators

Our most advanced actuators today are the Electrak XD, HD, LL, MD and Throttle families. These all feature integrated onboard controls, enabling a level of control that traditionally required complex external componentry. This advanced controllability allows you to monitor performance and perform diagnostic checks on the fly to help increase efficiency and productivity. Our smart actuators come with a wide range of control functions – from simpler options with only low-level switching to more advanced options with a CAN bus network to enable remote control of several actuators using only two wires.

Electrak Throttle, MD, HD and XD smart electric linear actuators

Smart Actuators

As the industrial world becomes increasingly connected, the need for intelligent components that can communicate and operate independently is growing. Thomson is meeting this demand with our smart actuators in which modular onboard controls and bus communication are key features.

Smart Actuator Benefits

- Increased efficiency and productivity
- Fewer components and less cabling
- Minimized complexity and easier installation
- Reduced hardware and software costs
- Decreased machine development time
- Reduced overall system weight
- Improved machine functionality and performance
- Bus communication between host control and actuators
- Position-based synchronization without having to add extra external controls
- Improved, more accurate controllability
- Speed and force control
- Enhanced diagnostic and monitoring capabilities

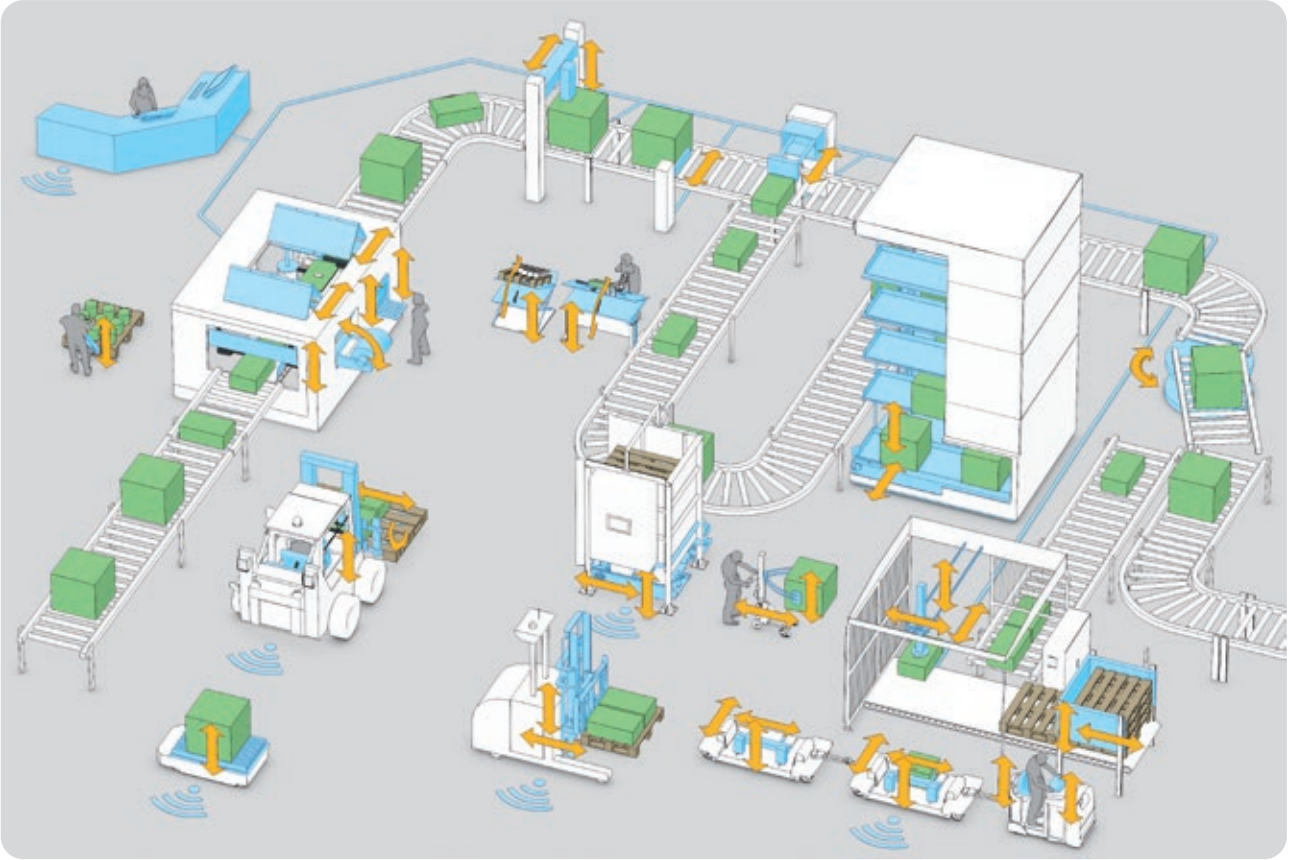

Smart actuators in an industrial automation environment

Traditional vs. Smart Systems

Traditional System

Each actuator with related devices is controlled by the host individually through multiple cables and boxes.

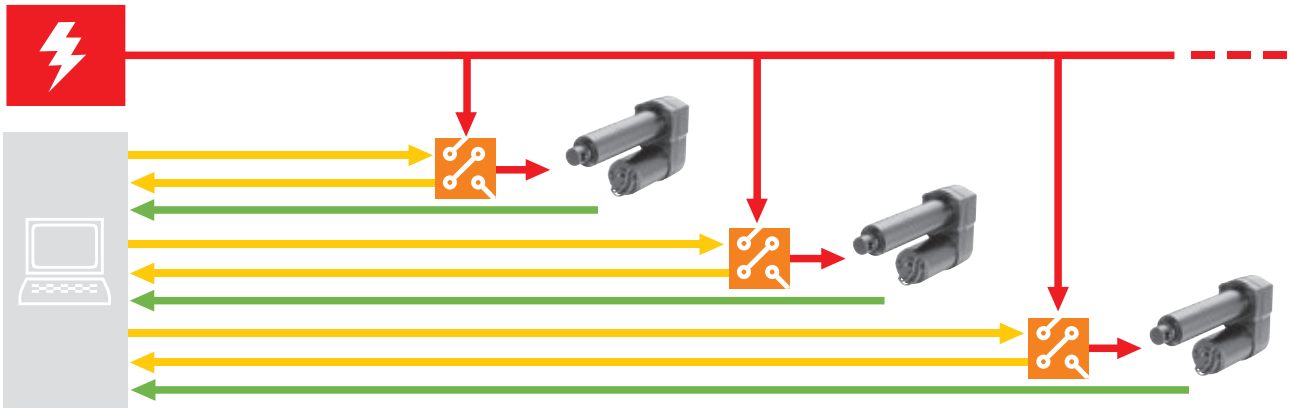

Bus Communication System

All actuators are controlled from the host over the same two-wire bus.

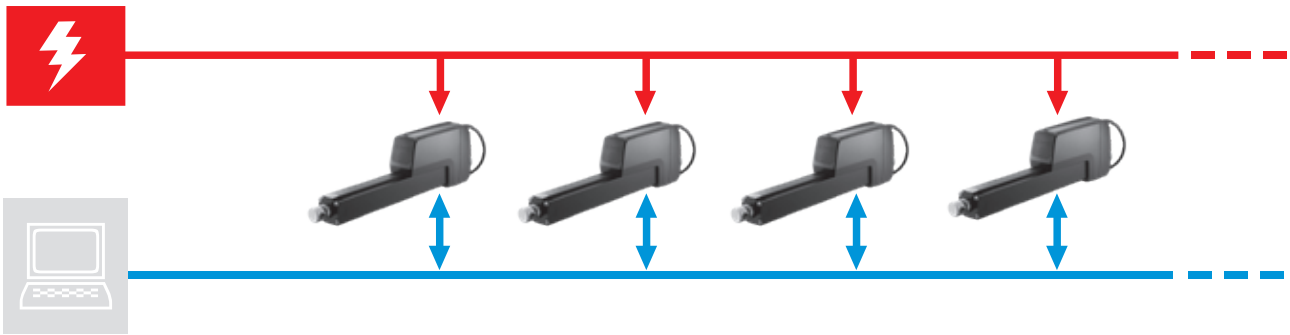

Synchronization System

The host communicates with the master actuator while the others follow it over the bus.

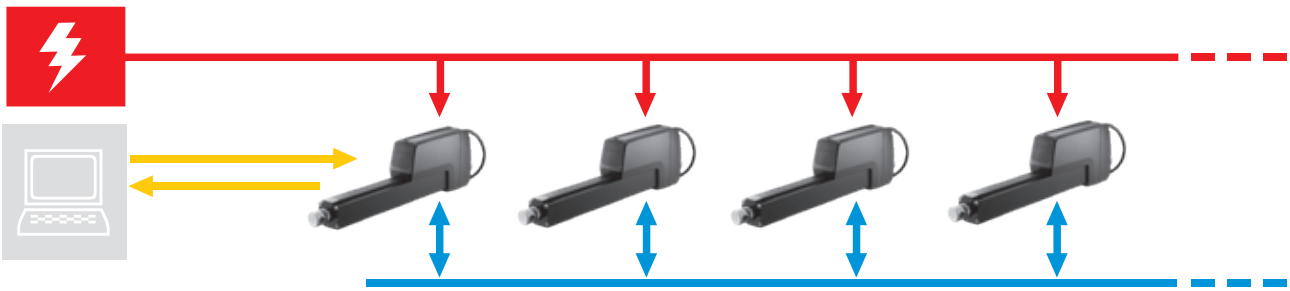

Power lines
Control signals
Position feedback signals
Bus communication

Power supply

Control box

Host control

Smart Modular Onboard Controls

Thomson's Electrak® Modular Control System (EMCS) is our onboard modular control system that makes it possible to tailor a smart actuator precisely to your application requirements. It is the base of the system that handles the power to the actuator and acts as a barrier between the outside and inside.

Safety Comes First

The Electronic Monitoring Package (EMP) is the most important module and is, with a few exceptions, always included. The EMP module monitors critical actuator functions and takes appropriate actions when needed.

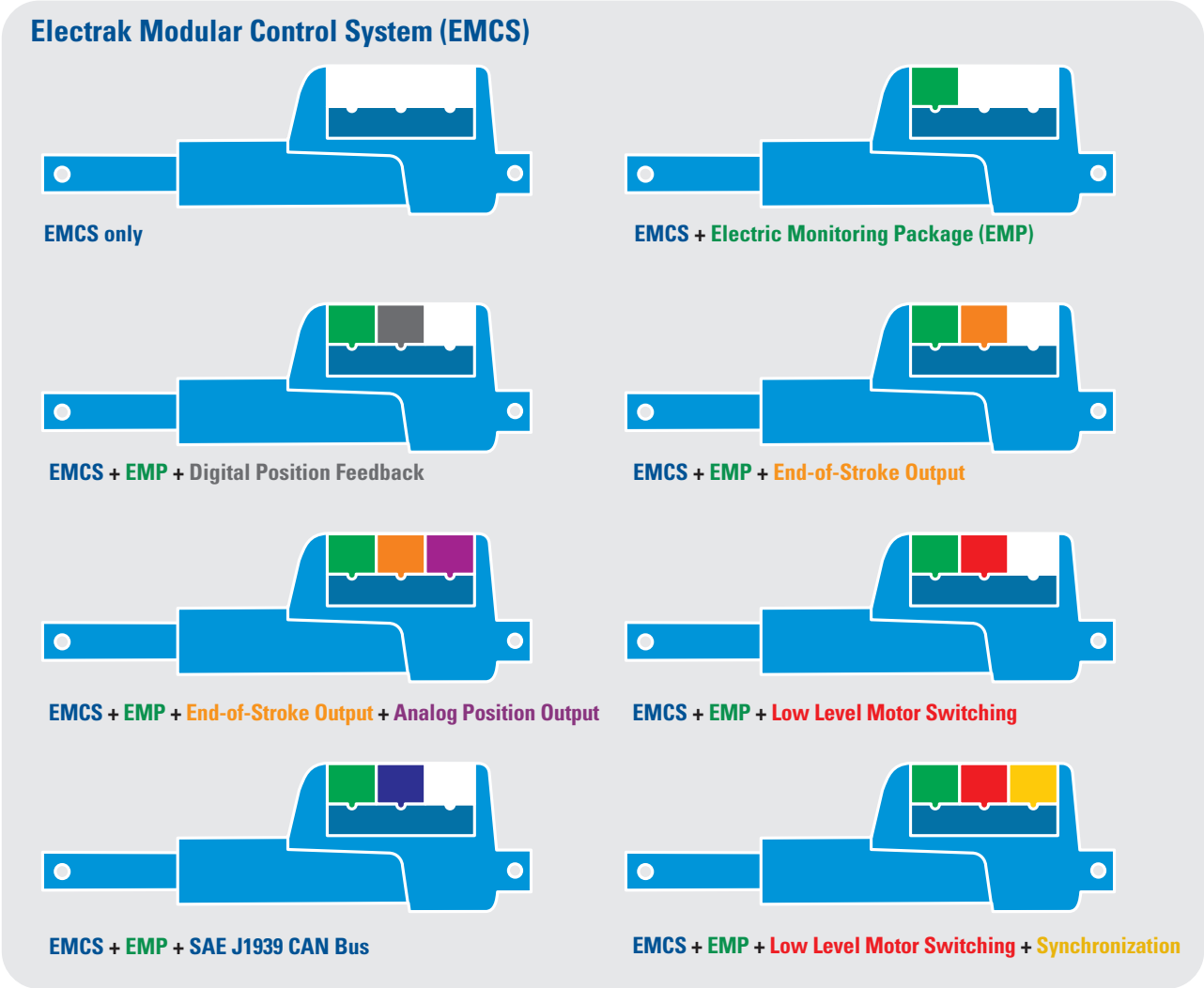

Many control module combinations are possible across our smart actuator range, including those shown above

What's On the Control Module Menu?

Each smart actuator has its own menu of control modules depending on what type of applications it is geared toward. Typical modules are low-level motor switching, end-of-stroke outputs, position feedback and CAN bus functionality, while modules such as programmable limit switches, force feedback, speed control, signal-follower and synchronization are more specialized. New modules are continuously being added, and custom solutions are also available.

Smart Control Applications

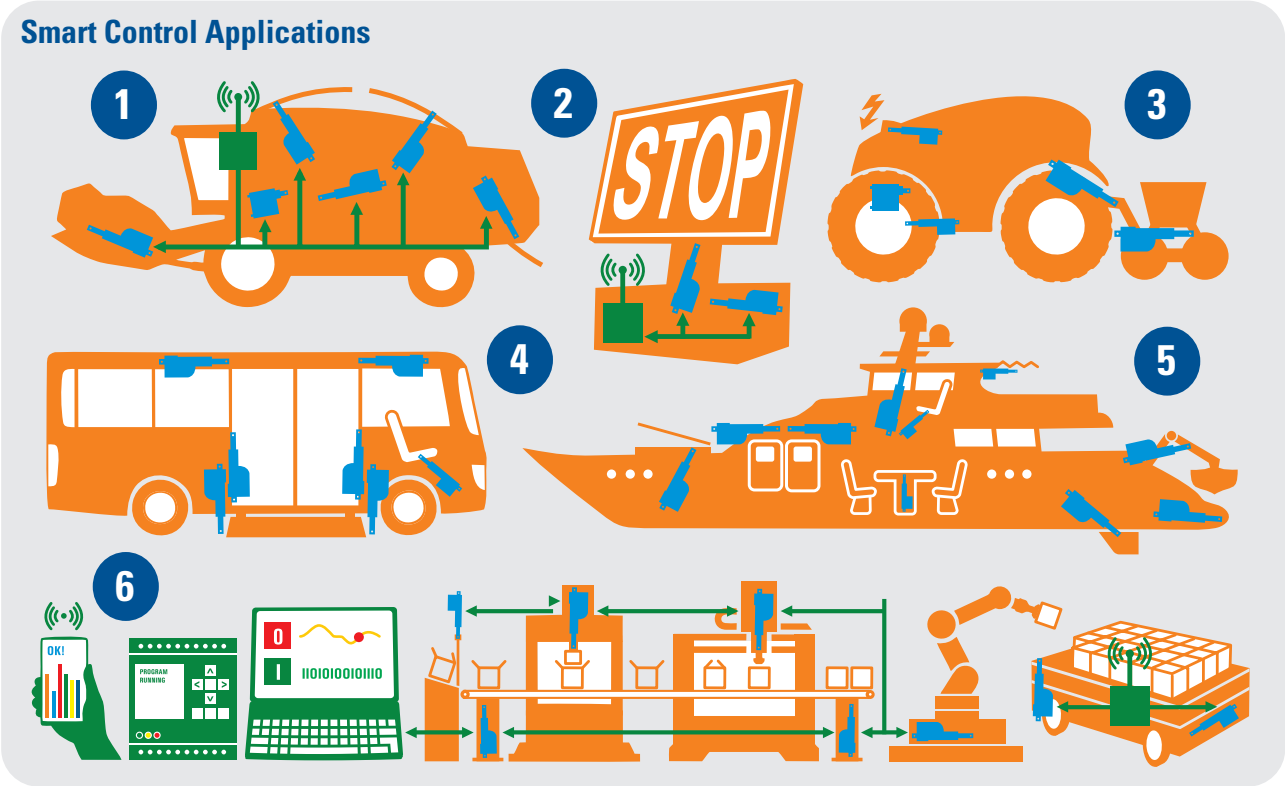

1. The combine uses a CAN bus control and wireless communication to keep track of productivity, adjust on the fly and monitor the actuator status.
2. Remote-controlled road sign/advertising board/arena monitor.
3. Driverless electric tractor with actuators for automatic recharge, steering and throttle control as well as for automatic recharge docking and fertilizer spreader control.
4. Synchronized actuators control the bus ramp and doors, while other actuators control driver seat settings.
5. Multiple smart actuators control the antennas, hatches, doors, sun roofs, tables, beds and many other applications on the yacht.
6. This production cell and AGV truck communicate over a CAN bus system to monitor and adjust the cell on the fly to allow for flexible manufacturing. Force feedback, speed control, position feedback, programmable limit switches and synchronization are just a few of the functions in use here.

These and many others functions are offered by Thomson's families of smart electric actuators.

Applications

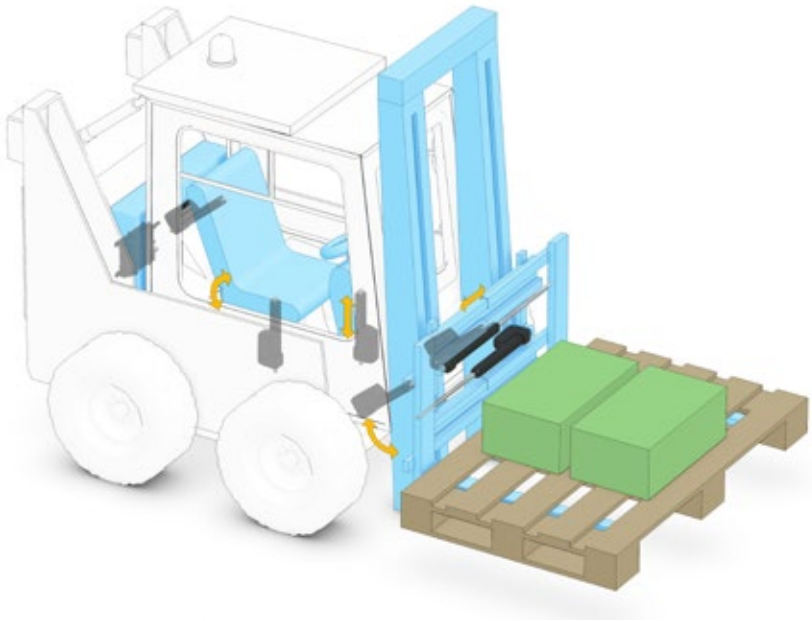

Lifting and Handling

- Fork lifts
- Sky lifts
- Cranes
- Snow machines
- Operator/passenger cabins
- Material handling vehicles

Mobile Off-Highway

- Combines
- Tractors
- Excavators
- Mining trucks
- Foresters

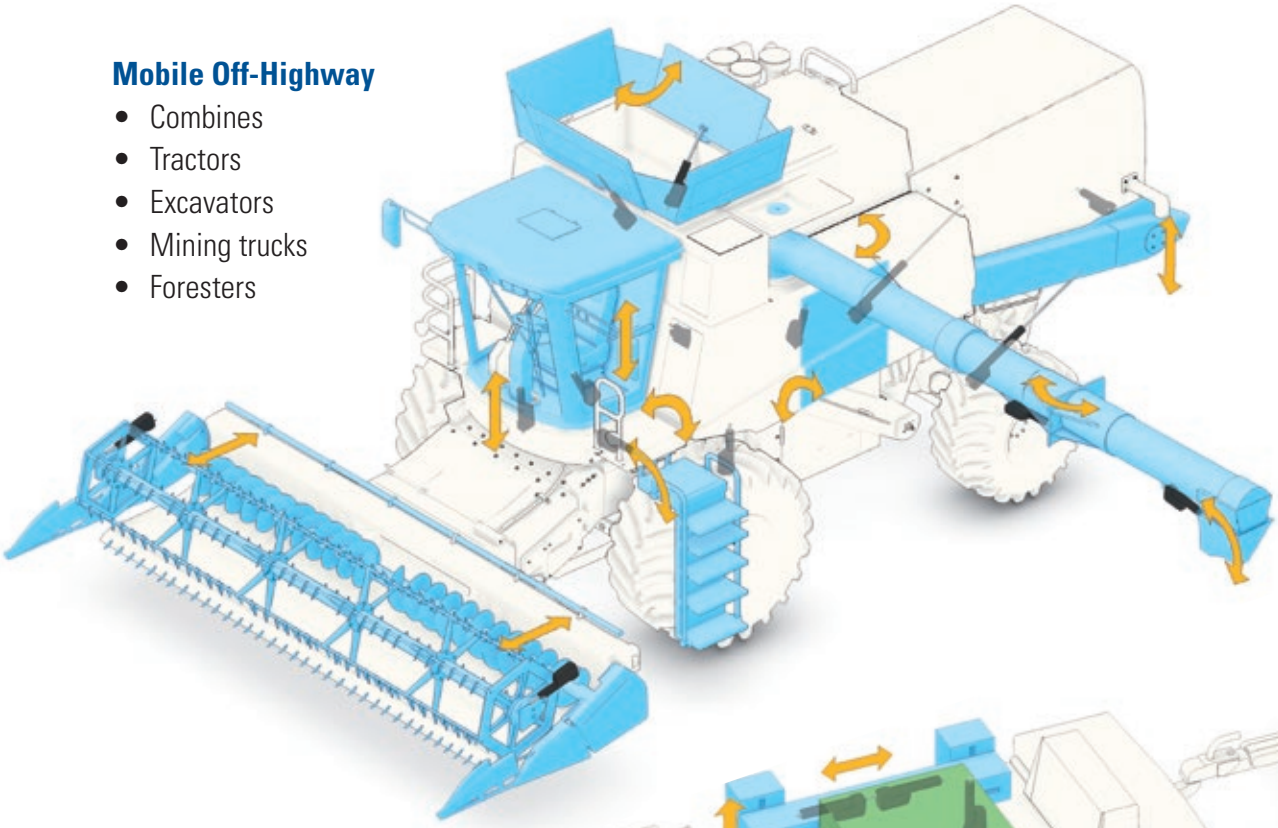

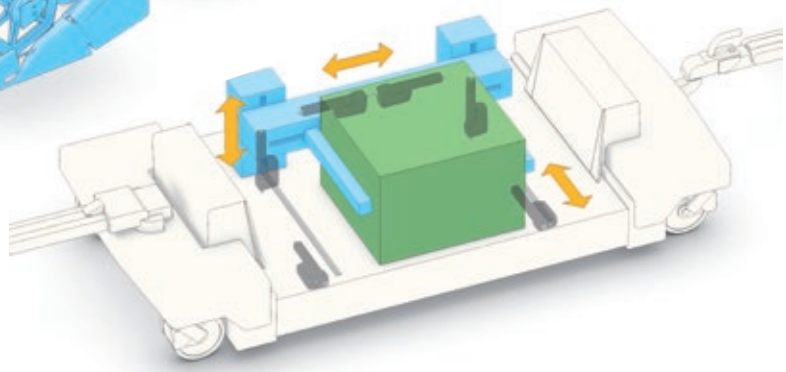

Logistics

- Logistic trains
- AGVs
- Trailers
- Containers

Utility Vehicles

- Garden tractors
- Ride-on lawn movers
- Golf carts
- Vehicles and adaptations for elderly and/or disabled

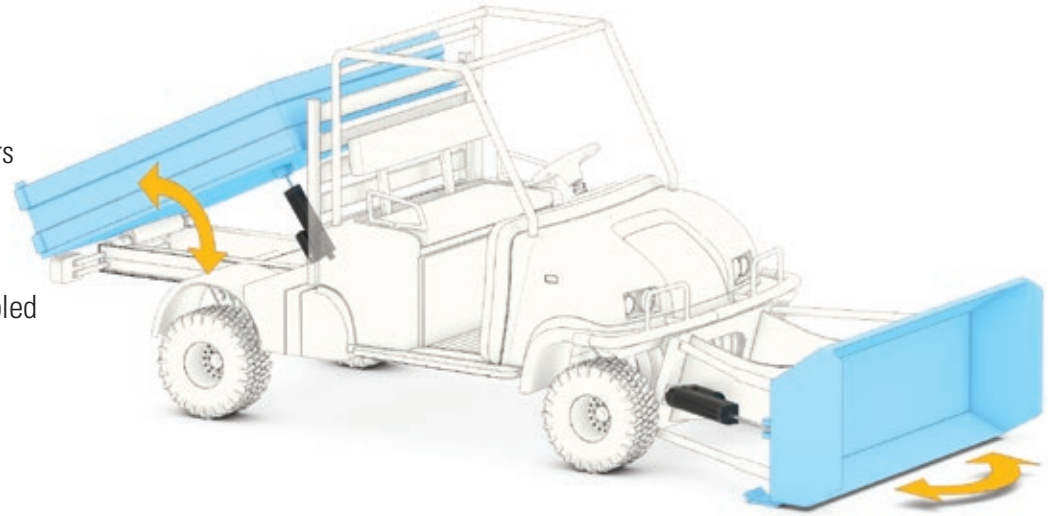

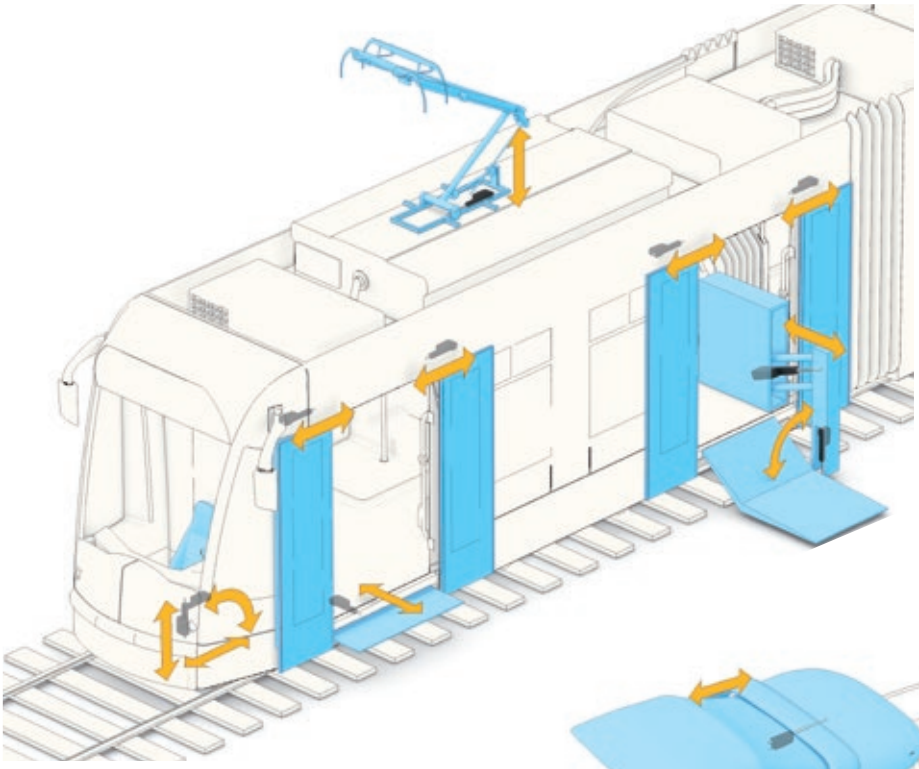

Public Transportation

- Trains
- Trams
- Buses
- Ferries
- Airport logistics

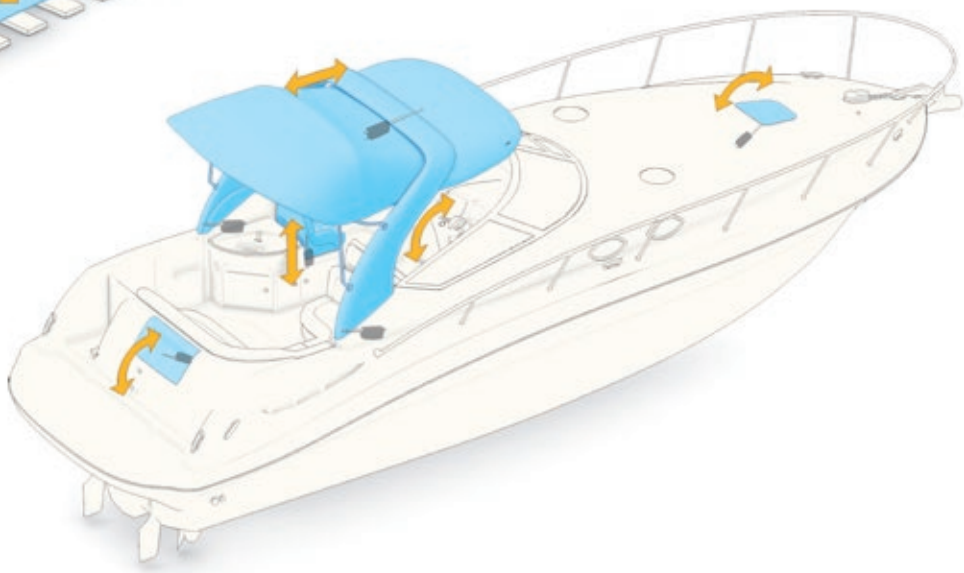

Off-Shore and Marine

- Boats, yachts and ships
- Oil and gas rigs
- Docks, harbors and shipyards

Applications

Cleaning and Recycling

- Recycling stations
- Sorting machines
- Garbage compressors
- Waste management
- Industrial washing

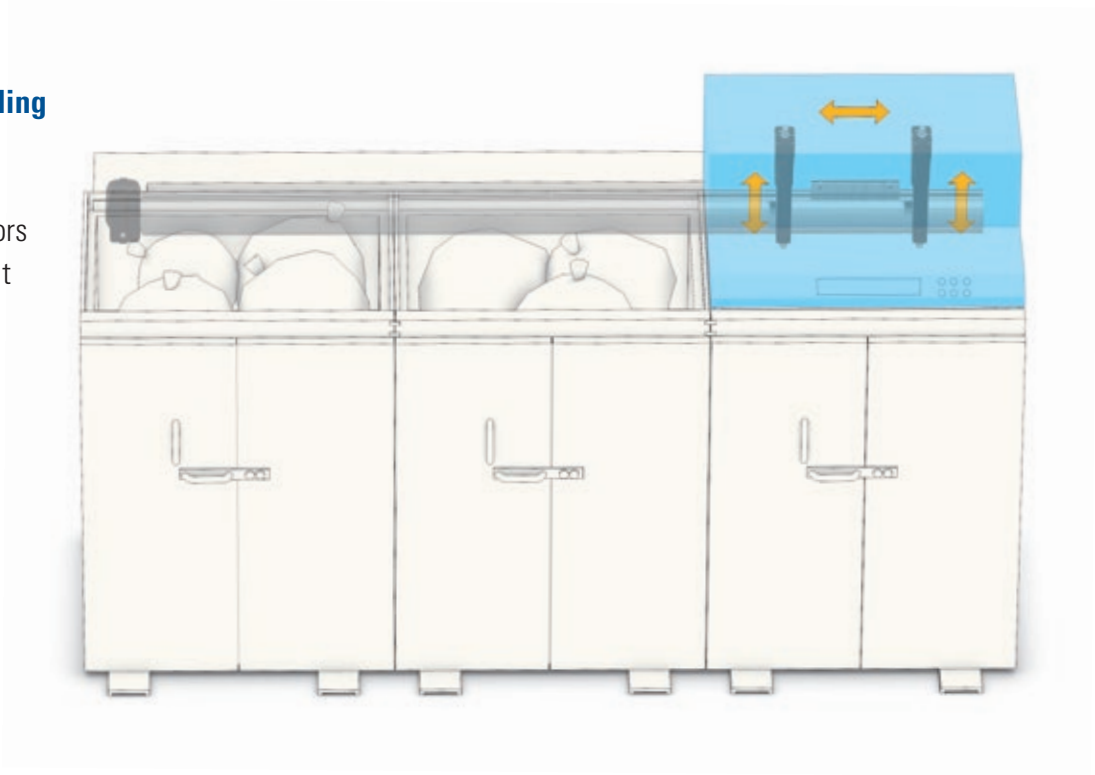

Industrial Automation

- Robots and manipulators
- Machining/machine tools
- Feeding and indexing equipment
- Handling equipment
- Painting/surface treatment
- Printing

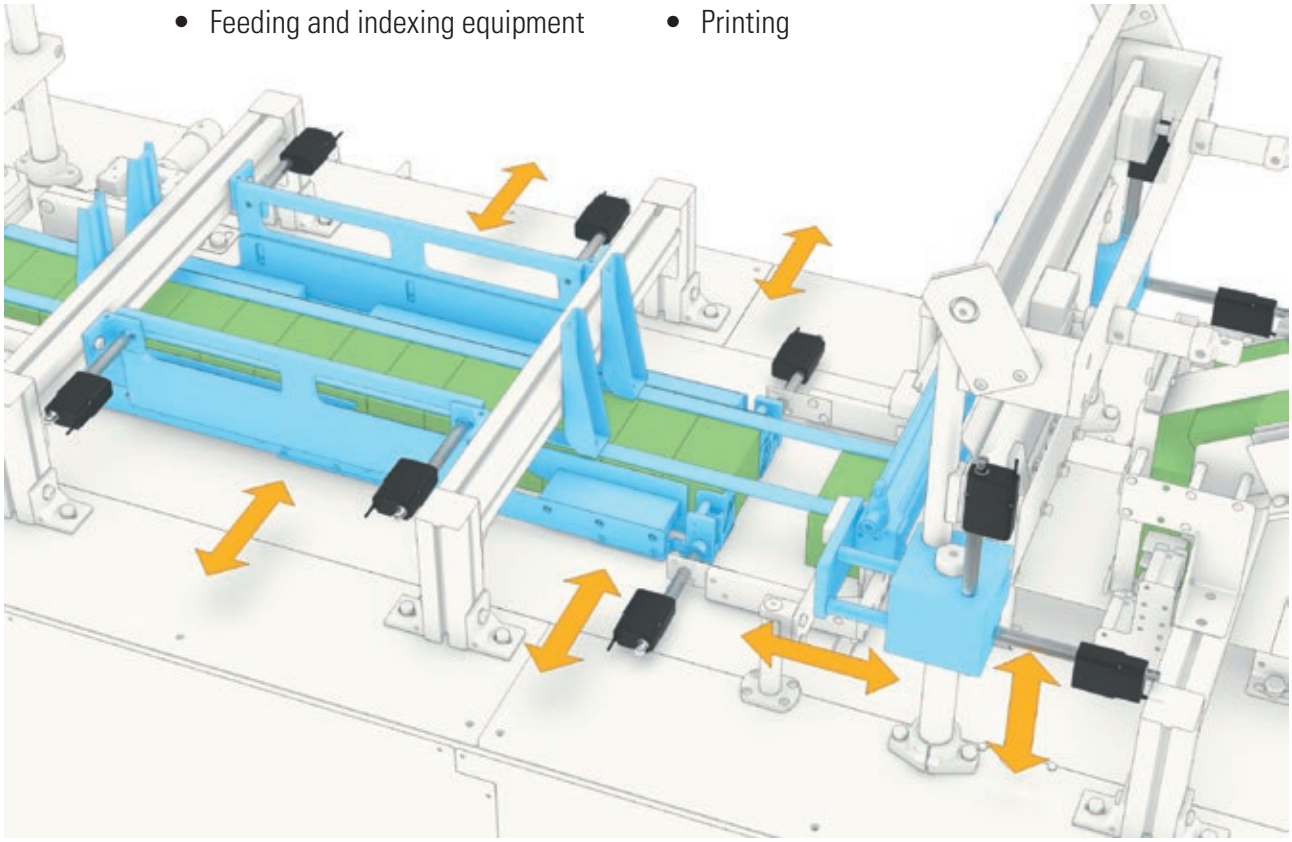

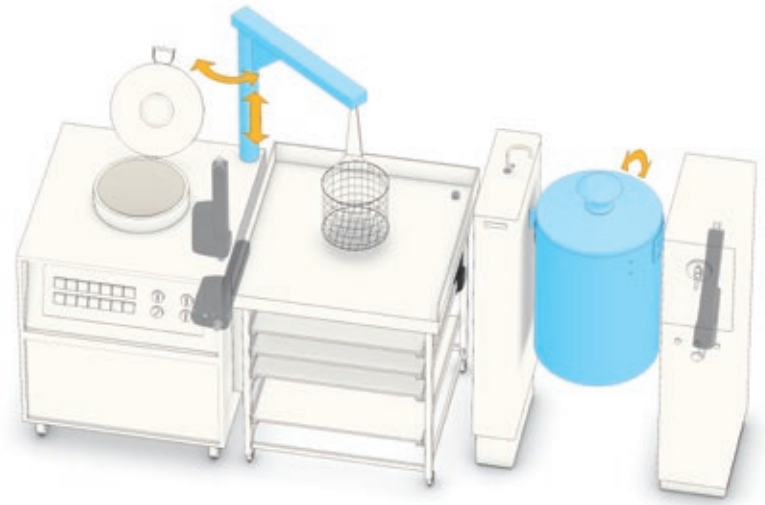

Food and Processing

- Restaurant kitchens
- Food/beverage machinery
- Chemical/medicine equipment
- Vending machines

Unmanned Vehicles

- Drones and drone landing pads
- Driverless cars and trucks
- Robotic lawn mowers
- Robotic cleaning machines

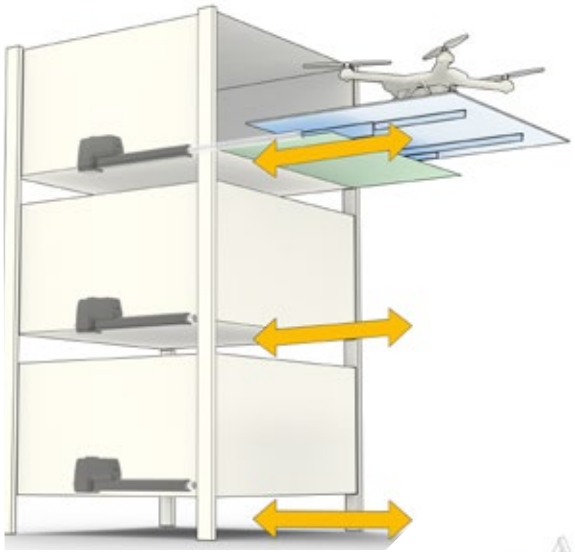

Healthcare and Assistance

- Staircase lifts
- Patient lifts
- Wheelchairs
- Beds and examination tables
- Furniture and training equipment
- Home and office automation

Workstations and Storage

- Fixtures
- Assembly line adjustments
- Automatic storage
- Lifting and positioning aids
- Ergonomic improvements

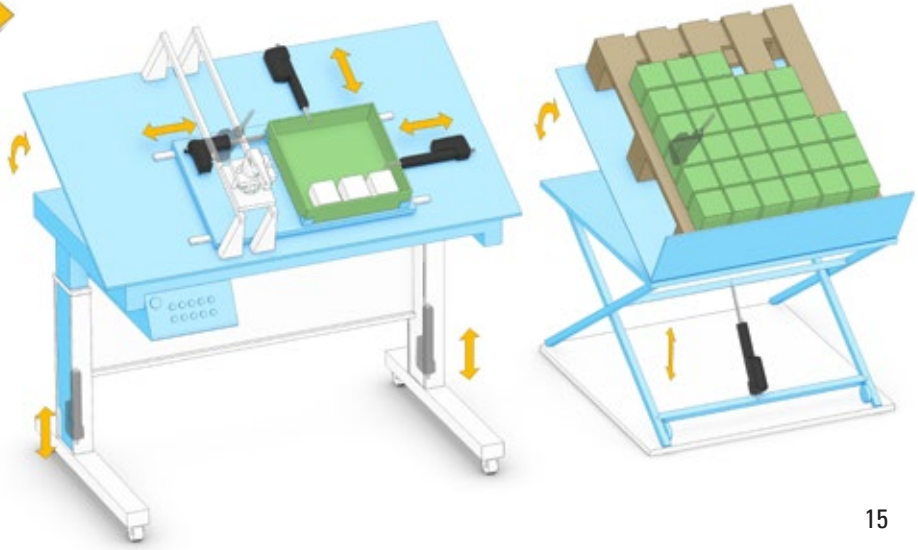

Online Sizing and Selection Tools

Thomson LinearMotioneering® for linear actuators is a self-service, online sizing and selection tool that saves you time and cost, and helps avoid misapplication. The tool allows you to quickly and accurately find your ideal solution by completing a self-guided, interactive series of questions that taps into the extensive application engineering knowledge base of Thomson experts.

LinearMotioneering is an easy-to-use, step-by-step tool that gathers all necessary information and then presents you with suitable solutions. Once the best candidate among the options is defined, LinearMotioneering allows you to download all of the technical data and a 3D CAD model of the selected actuator, shows you the cost and delivery time, and even lets you purchase it from the Thomson online store.

Your Own Project Library

All of your projects are stored in your own library so that you can return and continue working on them or use an old project as the basis for a new one. Since projects are stored online, you can open them from any computer, mobile phone or tablet – from anywhere in the world

Help with Custom Solutions

If LinearMotioneering can't find a suitable actuator for your project, you have the option to ask for a custom solution. The tool will ask for the necessary data so that our engineers can have a look and help you get what you need.

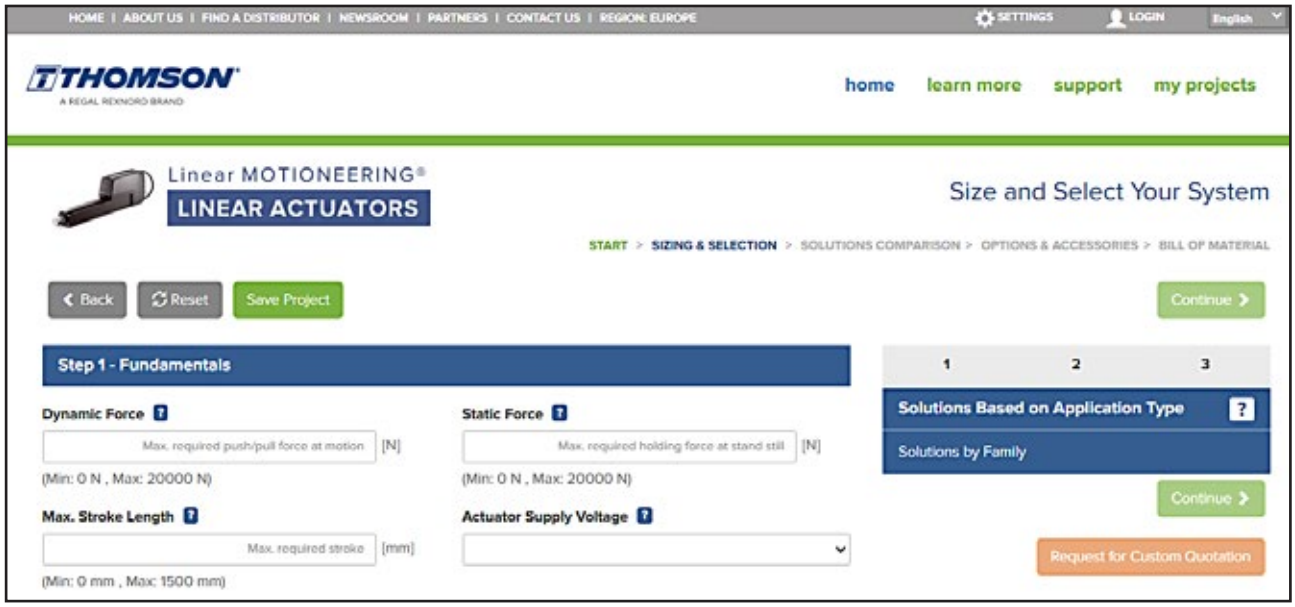

Do you want help to size and select the best match for your application?
Visit: www.linearactuators.linearmotioneering.com

Additional Online Resources

Thomson offers a wide variety of online resources to help you learn more about electric linear actuators. An experienced team of application engineers is also available to help you. To explore additional technical resources and options, contact Thomson customer support at www.thomsonlinear.com/contact.

Linear Actuators on the Web

Find additional information and learn more about electric linear actuators on this content-rich web page. Includes videos, webinar recordings, training, technical articles, customization details and much more.
www.thomsonlinear.com/en/products/linear-actuators#overview

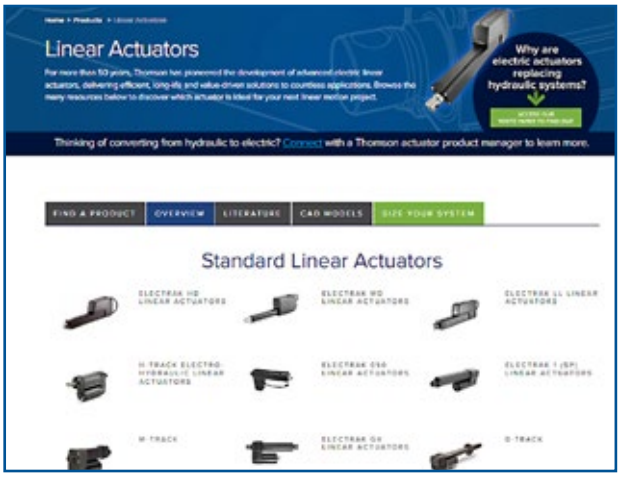

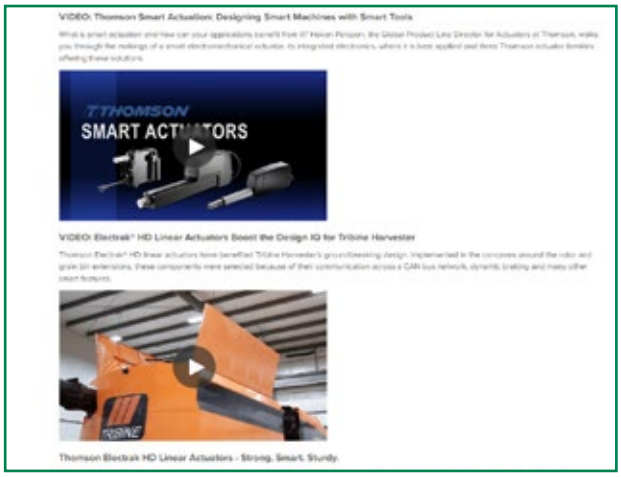

Interactive 3D CAD Models

Download free interactive 3D models in the most common CAD formats.
www.thomsonlinear.com/en/products/linear-actuators-drawings

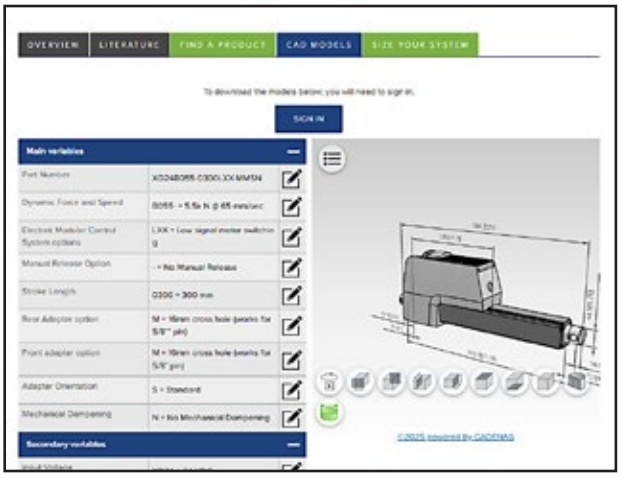

Electrification Guide

Learn more about how converting your actuation to electric can deliver a bevy of benefits to design projects.
www.thomsonlinear.com/en/products/electrification

On the Front Line Since 1967

From the first simple screw and motor linear actuators to today's smart hi-tech models with onboard controls, heavy duty performance and comprehensive environmental protection - Thomson has always been at the forefront of exploring the possibilities of what linear actuators can achieve.

1967
The **Performance Pak** line, the world's first electric linear actuators and designed for farm and garden equipment, are released.

1974
The first line of **parallel motor actuators** are released.

1982
The **Electrak® 10** actuator line is released and becomes the benchmark for all future linear actuators.

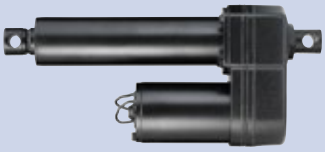

1984
Electrak 1, the worlds' first miniature linear actuator is released.

1991
The first series of **lifting columns** are released.

1999
Electrak 050 is released as the first composite housing actuator.

2000
The rodless **LM80 actuator** is released.

2006
Electrak Pro, the first Thomson linear actuator with a modular onboard control concept in a one-size housing, is released.

2013
Both **Electrak Throttle**, Thomson's first CAN bus control actuator, and **Max Jac** heavy duty actuator are released.

Today, our engineers continue improving the electric linear actautor and adapting it to serve in even more roles and applications. You will meet Thomson actuators in the field, at sea, in the workshop, inside machines and in a vast number of other places, relentlessy doing their job.

2016
Electrak HD, the first truly smart actuator and a milestone in actuator engineering, is released, redefining what linear actuators are and can be used for.

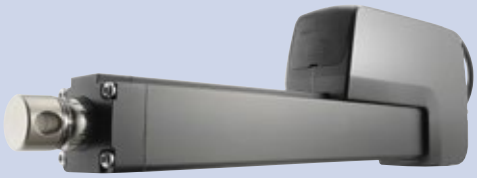

2019
Electrak GX is released, setting a new standard for traditional linear actuators.

2020
Electrak MD is released, broadening the smart actuator range into the compact segment.

2021
Electrak LL, a smart, long-life synchronious motor actuator with superior environmental protection, is released. The **B-Track**, **M-Track** and **H-Track** are added to the actuator range.

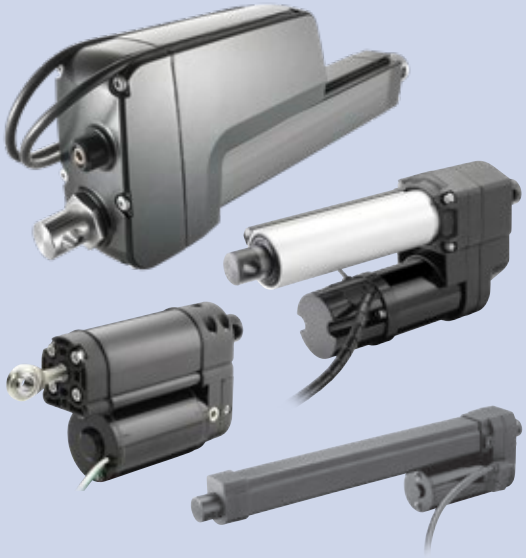

2023
Electrak XD, the first electric actuator to be strong enough to truly contend with hydraulic cylinders, is released, and is equipped with all of the standard advantages associated with Thomson smart actuators.

2025
H-Track Marine, the first electric actuator that can operate while submerged in water for longer periods, is released.

Performance Overview

Specifications

		Electrak® XD	Electrak HD	
Screw type		ball	ball	
Manual operation		optional	yes	
Static load holding		yes	yes	
End-of-stroke protection		internal limit switches	internal limit switches	
Overload protection		yes	yes	
Available input voltages	[Vdc] [Vac]	24, 48 -	12, 24, 48 -	
Max. static load	[N (lbf)]	32000 (7194)	18000 (4000)	
Max. dynamic load (Fx)	[N (lbf)]	25000 (5620)	16000 (3584)	
Max. speed @ no load / max. load	[mm/s (in/s)]	75 (2.95) (1)	71 / 58 (2.80 / 2.28)	
Max. ordering stroke (S) length	[mm] / [in]	1200 / -	1000 / -	
Restraining torque	[Nm (lbf-in)]	0	0	
Operating temperature limits	[°C (F)]	- 40 – 85 (- 40 – 185)	- 40 – 85 (- 40 – 185)	
Full load duty cycle @ 25 °C (77 °F)	[%]	50	25	
Ingress protection rating - static / dynamic		IP67, IP69K / IP66	IP67, IP69K / IP66	
Control options				
End-of-stroke output		yes	yes	
Analog position feedback		no	yes	
Digital position feedback		yes	yes	
Low-level switching		yes	yes	
Programmable extend and retract limits		yes	yes	
Signal-follower		no	yes	
Synchronization		no	yes	
SAE J1939 CAN bus		yes	yes	
CANopen® CAN bus		yes	yes	
End-of-stroke limit switches		standard	standard	
Page		28	44	

(1) Synchronous constant speed motor

= SMART ACTUATOR

	Electrak LL	Electrak MD	DMHD
	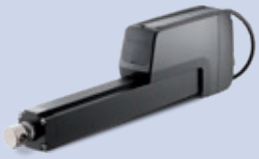	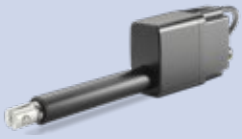	
	ball	acme	ball
	yes	yes	yes
	yes	yes (self-locking)	yes
	internal limit switches	internal limit switches	internal limit switches
	yes	yes (optional)	yes
	24, 48 -	12, 24, 48 -	12, 24, 48 -
	15000 (3372)	2000 (450)	18000 (4000)
	6000 (1349)	2000 (450)	16000 (2248)
	54 (2.13) (1)	52 / 43.8 (2.04 / 1.72)	71 / 58 (2.80 / 2.28)
	450 / -	300 / -	600 / -
	0	0	0
	- 40 – 85 (- 40 – 185)	- 40 – 85 (- 40 – 185)	- 40 – 85 (- 40 – 185)
	35	25	25
	IP67, IP69K / IP66	IP67, IP69K / IP66	IP65 / -
	yes	yes	yes
	yes	yes	yes
	no	no	yes
	yes	yes	yes
	no	no	yes
	no	no	yes
	no	no	yes
	yes	yes	yes
	yes	yes	yes
	standard	standard	standard
	60	70	80

(1) Synchronous constant speed motor

Performance Overview

Specifications

		Electrak® GX DC	Electrak GX AC	
Screw type		acme or ball	acme or ball	
Manual operation		optional	optional	
Static load holding		yes	yes	
End-of-stroke protection		clutch	clutch	
Overload protection		yes	yes	
Available input voltages	[Vdc] [Vac]	12, 24, 36, 48, 90 -	- 1 × 115, 1 × 230, 3 × 400	
Max. static load	[N (lbf)]	18000 (4000)	18000 (4000)	
Max. dynamic load (Fx)	[N (lbf)]	9000 (2000)	9000 (2000)	
Max. speed @ no load / max. load	[mm/s (in/s)]	61 / 37 (2.40 / 1.40)	53 / 43 (2.10 / 1.70)	
Max. ordering stroke (S) length	[mm] / [in]	- / 24	- / 24	
Restraining torque	[Nm (lbf-in)]	11.3 (100)	11.3 (100)	
Operating temperature limits	[°C (F)]	- 25 – 65 (- 15 – 150)	- 25 – 65 (- 15 – 150)	
Full load duty cycle @ 25 °C (77 °F)	[%]	25	25	
Ingress protection rating - static / dynamic		IP66, IP69K / -	IP45 / -	
Control options				
End-of-stroke output		no	no	
Analog position feedback		yes	yes	
Digital position feedback		no	no	
Low-level switching		no	no	
Programmable extend and retract limits		no	no	
Signal-follower		no	no	
Synchronization		no	no	
SAE J1939 CAN bus		no	no	
CANopen® CAN bus		no	no	
End-of-stroke limit switches		no	no	
Page		92	102	

= SMART ACTUATOR

	Electrak LA14	Electrak LA24	B-Track IC DC	B-Track IC AC
	acme or ball	acme or ball	acme or ball	acme or ball
	optional	optional	yes	yes
	yes	yes	yes	yes
	clutch	clutch	yes	yes
	yes	yes	yes	yes
	12, 24, 36 -	- 1 × 115, 1 × 230, 3 × 400	12, 24 -	- 1 × 115, 1 × 230
	18000 (4000)	18000 (4000)	13345 (3000)	13345 (3000)
	6800 (1500)	4500 (1000)	12460 (2800)	12460 (2800)
	61 / 37 (2.40 / 1.40)	53 / 43 (2.10 / 1.70)	73 / 43 (2.85 / 1.7)	44 / 32 (1.75 / 1.28)
	600 / -	600 / -	- / 24	- / 24
	0	0	11.3 (100)	11.3 (100)
	- 25 – 65 (- 15 – 150)	- 25 – 65 (- 15 – 150)	- 29 – 65 (- 20 – 150)	- 29 – 65 (- 20 – 150)
	25	25	25	25
	IP65 / -	IP45 / -	IP66, IP69K / -	IP54 / -
	no	no	yes	yes
	yes	yes	yes	yes
	no	no	no	no
	no	no	yes	no
	no	no	no	no
	no	no	no	no
	no	no	no	no
	no	no	no	no
	no	no	no	no
	no	no	yes	no
	114	122	132	140

Performance Overview

Specifications

		B-Track DC	B-Track AC	
Screw type		acme or ball	acme or ball	
Manual operation		yes	yes	
Static load holding		yes	yes	
End-of-stroke protection		yes	yes	
Overload protection		yes	yes	
Available input voltages	[Vdc] [Vac]	12, 24, 36, 48, 90 -	- 1 × 115, 1 × 230	
Max. static load	[N (lbf)]	13345 (3000)	13345 (3000)	
Max. dynamic load (Fx)	[N (lbf)]	12460 (2800)	12460 (2800)	
Max. speed @ no load / max. load	[mm/s (in/s)]	73 / 43 (2.85 / 1.7)	44 / 32 (1.75 / 1.28)	
Max. ordering stroke (S) length	[mm] / [in]	- / 24	- / 24	
Restraining torque	[Nm (lbf-in)]	11.3 (100)	11.3 (100)	
Operating temperature limits	[°C (F)]	- 29 – 65 (- 20 – 150)	- 29 – 65 (- 20 – 150)	
Full load duty cycle @ 25 °C (77 °F)	[%]	25	25	
Ingress protection rating - static / dynamic		IP66, IP69K / -	IP54 / -	
Control options				
End-of-stroke output		no	no	
Analog position feedback		no	no	
Digital position feedback		no	no	
Low-level switching		no	no	
Programmable extend and retract limits		no	no	
Signal-follower		no	no	
Synchronization		no	no	
SAE J1939 CAN bus		no	no	
CANopen® CAN bus		no	no	
End-of-stroke limit switches		no	no	
Page		146	152	

	H-Track	Electrak® 1 S	Electrak 1 SP	M-Track	Electrak 050
	none (hydraulic piston)	acme	acme	acme	worm
	yes	no	no	no	no
	yes	yes	yes	yes	yes
	no	internal limit switches	no	internal limit switches	internal limit switches and clutch
	yes	no	no	no	yes
	12, 24, 48 -	12, 24 -	12, 24 -	12, 24 -	12, 24, 36 -
	22241 (5000)	1300 (300)	1300 (300)	1300 (300)	1020 (224)
	21351 (4800)	340 (75)	340 (75)	735 (165)	510 (112)
	111.2 / 111.2 (4.38 / 4.38)	78 / 64 (3.1 / 2.5)	78 / 64 (3.1 / 2.5)	44 / 40 (1.74 / 1.58)	48 / 37 (1.9 / 1.5)
	- / 16	- / 8	- / 8	- / 12	200 / -
	0.1 (0.89)	2.3 (1.7)	0	0	0
	- 26 – 65 (- 20 – 150)	- 25 – 65 (- 13 – 150)	- 25 – 65 (- 13 – 150)	- 25 – 65 (- 13 – 150)	-30 – 80 (-22 – 176)
	25	25	25	25	25
	IP69K, IP67 / IP65	IP66 / -	IP66 / -	IP69K / IP65	IP56 / -
	no	no	no	no	no
	no	no	standard	yes	yes
	no	no	no	no	no
	no	no	no	no	no
	no	no	no	no	no
	no	no	no	no	no
	no	no	no	no	no
	no	no	no	no	no
	no	no	no	no	no
	no	standard	no	standard	yes
	158	170	176	182	188

Performance Overview

Specifications

		Max Jac®	Electrak® Throttle	Electrak PPA	
			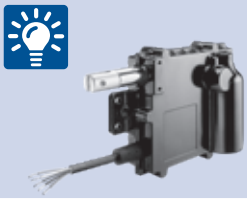	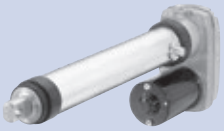	
Screw type		worm or ball	worm	ball	
Manual operation		no	no	no	
Static load holding		worm yes, ball no	yes	yes	
End-of-stroke protection		no	internal limit switches and clutch or current sensing	clutch	
Overload protection		no	yes	yes	
Available input voltages	[Vdc] [Vac]	12, 24 -	12, 24 -	12, 24, 36 -	
Max. static load	[N (lbf)]	2000 (450)	260 (60)	13350 (3000)	
Max. dynamic load (Fx)	[N (lbf)]	800 (180)	130 (30)	6670 (1500)	
Max. speed @ no load / max. load	[mm/s (in/s)]	60 / 30 (2.4 / 1.2)	196 / 83 (3.7 / 3.3)	32 / 28 (1.26 / 1.10)	
Max. ordering stroke (S) length	[mm] / [in]	300 / -	- / 2	- / 36	
Restraining torque	[Nm (lbf-in)]	2 (1.48)	0	22 (200)	
Operating temperature limits	[°C (F)]	- 40 – 85 (- 40 – 185)	- 40 – 125 (- 40 – 257)	- 25 – 65 (- 15 – 150)	
Full load duty cycle @ 25 °C (77 °F)	[%]	25	50	30	
Ingress protection rating - static / dynamic		IP66, IP69K / -	IP69K, IP67 / -	IP54 / -	
Control options					
End-of-stroke output		no	no	no	
Analog position feedback		yes	yes	yes	
Digital position feedback		yes	no	no	
Low-level switching		no	no	no	
Programmable extend and retract limits		no	no	no	
Signal-follower		no	no	no	
Synchronization		no	no	no	
SAE J1939 CAN bus		no	yes	no	
CANopen® CAN bus		no	no	no	
End-of-stroke limit switches		no	yes	yes	
Page		194	200	208	

= SMART ACTUATOR

	DMD	DMA	LM80H	LM80V
	acme or ball	acme or ball	trapezoidal or ball	trapezoidal or ball
	optional	optional	no	no
	yes	yes	no	no
	clutch	clutch	spring loaded soft stop	spring loaded soft stop
	yes	yes	no	no
	12, 24 -	- 1 × 230, 3 × 400	12, 24 -	12, 24 -
	18000 (4000)	18000 (4000)	2000 (450)	2000 (450)
	6800 (1500)	6800 (1500)	750 (169)	750 (169)
	61 / 37 (2.40 / 1.40)	61 / 37 (2.40 / 1.40)	110 / 73 (4.3 / 2.9)	110 / 83 (4.3 / 3.3)
	600 / -	600 / -	1500 / -	1500 / -
	0	0	0	0
	- 25 – 85 (- 15 – 185)	- 25 – 85 (- 15 – 185)	0 – 40 (32 – 104)	0 – 40 (32 – 104)
	25	25	15	15
	IP65 / -	IP65 / -	IP44 / -	IP44 / -
	no	no	no	no
	yes	yes	no	no
	no	no	no	no
	no	no	no	no
	no	no	no	no
	no	no	no	no
	no	no	no	no
	no	no	no	no
	no	no	no	no
	no	no	no	no
	216	222	228	234

Electrak® XD – Technical Features

SMART

Standard Features

- Constant speed irrespective of load
- Tough, strong and reliable
- Electronic Monitoring Package as standard
- Low-level signal motor switching as standard
- Speed control as standard
- Loads up to 25000 N (5620 lbf)
- Speeds up to 75 mm/s (2.95 in/s)
- Strokes up to 1200 mm
- Optional onboard controls
- Optional manual brake release and override
- Optional shock load dampening feature
- Optional force feedback

General Specifications

Screw type	ball
Nut type	load lock ball nut
Manual override	optional
Anti-rotation	yes
Static load holding brake	yes
Safety features	Electrak monitoring package: current monitoring voltage monitoring temperature monitoring temperature compensation load trip point calibration internal end-of-stroke limit switches[1] full stroke dynamic braking
Electrical connections Power Signal	 integral screw terminals integrated housing connector
Compliance	CE, UKCA, RoHS, REACH (EU)

Optional Electronic Control Features

CANopen® CAN bus
SAE J1939 CAN bus
Programmable limit switches
End-of-stroke indication output
Digital position output

Optional Mechanical Features

Shock load dampening
Manual brake release/override
Variety of front and rear adapters
Alternative adapter orientation
Rear adapter with force feedback sensor

Control Option Combinations

LXX	Electrak Monitoring package + Low-Level Signal Motor Switching + Force Feedback Output
LLX	LXX + Position Feedback Output
LXP	LXX + Analog Position Output
LLP	LXX + Position Feedback Output + End-of-stroke Outputs
PLS	LXX + Position Feedback Output + Programmable End-of-stroke Limits
CNO	SAE J1939 CAN Bus Control + Open-Loop Speed Control
COO	CANopen® CAN Bus Control + Open-Loop Speed Control

Accessories

Signal cable and connector harness

Electrak XD – Technical Specifications

Mechanical Specifications

Max. static load	[kN (lbf)]	see page 22
Max. dynamic load (Fx)	[kN (lbf)]	
XDxx-B055		5.5 (1236)
XDxx-B080		8.0 (1798)
XDxx-B160		16.0 (3597)
XDxx-B200		20.0 (4496)
XDxx-B250		25.0 (5620)
Speed [1] [2]	[mm/s (in/s)]	
XD24-B055		65 (2.56)
XD48-B055		75 (2.95)
XD24-B080		50 (1.97)
XD48-B080		50 (1.97)
XD24-B160		25 (0.98)
XD48-B160		25 (0.98)
XD24-B200		16 (0.63)
XD48-B200		20 (0.79)
XD24-B250		16 (0.63)
XD48-B250		16 (0.63)
Min. ordering stroke (S) length	[mm]	100
Max. ordering stroke (S) length	[mm]	
XDxx-B055(B080)		1200
XDxx-B160		1000
XDxx-B200		800
XDxx-B250		650
Ordering stroke length increments	[mm]	50
Operating temperature limits	[°C (F)]	-40 – 85 (-40 – 185)
Max. duty cycle @ 25 °C (77 °F)	[%]	
@ full load		50
@ other load		see page ??
End play, maximum	[mm (in)]	1.2 (0.047)
Restraining torque	[Nm (lbf-in)]	0
Weight of options	[kg (lbs)]	
Shock load dampening		1.16 (2.56)
Manual brake release and override		0.71 (1.56)
Protection class - static (dynamic) [3]		IP67/IP69K (IP66)
Salt spray resistance	[h]	500

[1] Speed is constant and load independent from zero to max load.
[2] Do not use PWM voltage for speed control to avoid damaging the onboard electronics.
[3] The protection class is valid only with a mating connector attached to the signal connector in the actuator housing.

Electrical Specifications

Available input voltages	[Vdc]	24, 48
Input voltage tolerance	[Vdc]	
XD24 (24 Vdc input voltage)		18 - 32
XD48 (48 Vdc input voltage)		36 - 60
Current draw @ min. / max. load	[A]	
XD24-Bxxx		6 / 28
XD48-Bxxx		3 / 14
Power supply ring terminal size		M6
Ring terminal hole center to insulation end distance, max. (Amax)	[mm]	34.5
Signal connector type* Female 12 pin Amphenol Ecomate		RTS014N12S03

* Connector manufacturers designation and part number.

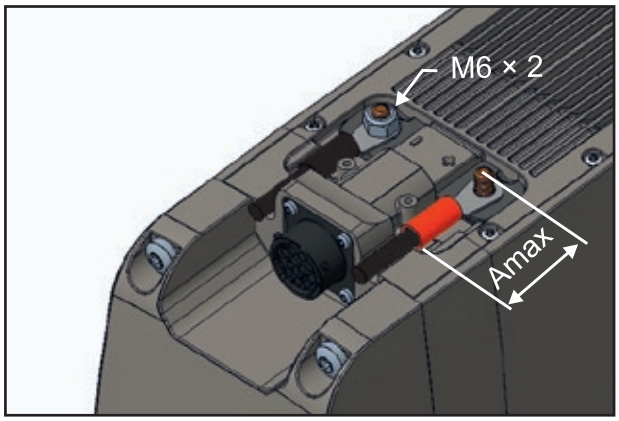

Connector for the control signals and inlets for the power supply wires.

Actuator Base Weight*

Mass	Ordering Stroke (S) [mm]																						
	100	150	200	250	300	350	400	450	500	550	600	650	700	750	800	850	900	950	1000	1050	1100	1150	1200
[kg]	11.9	12.4	12.9	13.5	14.0	14.5	15.0	15.6	16.1	16.6	17.1	17.7	18.2	18.7	19.2	19.8	20.3	20.8	21.3	21.9	22.4	22.9	23.4
[lbs]	26.1	27.3	28.5	29.7	30.8	32.0	33.1	34.3	35.4	36.6	37.8	39.0	40.1	41.3	42.4	43.6	44.7	45.9	47.0	48.2	49.4	50.6	51.7

* For weight of options, see table above.

Electrak® XD – Dimensions

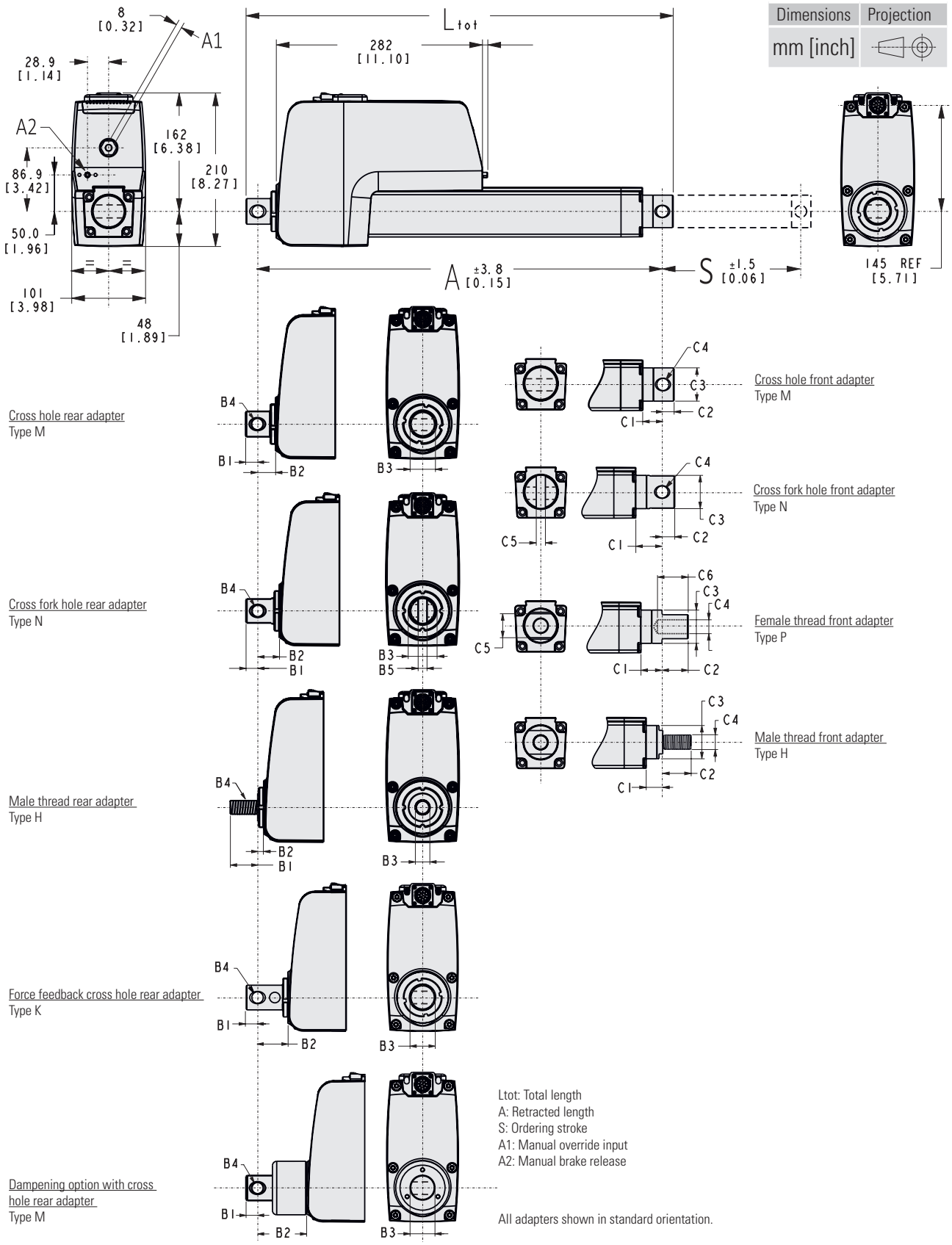

Stroke, Retracted Length and Total Length Relationships

Ordering stroke (S)	[mm]	100 - 1200 mm in 50 mm increments
Retracted Length (A)	[mm (in)]	S + 200.8 (7.91) + B2 + C1
Total Length (Ltot)		A + B1 + C2

Rear and Front Adapter Dimensions [mm (in)]

	Rear Adapter Types				
	M	N	H	K	M + dampening option
B1	16.1 (0.63)	16.1 (0.63)	38.0 (1.50)	16.1 (0.63)	16.1 (0.63)
B2	25.3 (1.00)	29.9 (1.18)	8.2 (0.32)	43.3 (1.70)	68.9 (2.71)
B3	35.0 (1.38)	35.0 (1.38)	M20 × 1.5	35.0 (1.38)	35.0 (1.38)
B4	16.2 (0.64)	16.2 (0.64)	M20 × 1.5	16.2 (0.64)	16.2 (0.64)
B5	-	12.2 (0.48)	-	--	
	Front Adapter Types				
	M	N	P	H	
C1	27.1 (1.07)	35.1 (1.38)	28.1 (1.11)	22.1 (0.87)	
C2	14.9 (0.59)	16.9 (0.67)	35.0 (1.38)	38.0 (1.50)	
C3	44.5 (1.75)	44.5 (1.75)	44.5 (1.75)	44.5 (1.75)	
C4	16.2 (0.64)	16.2 (0.64)	M20 × 1.5	M20 × 1.5	
C5	-	12.2 (0.48)	32.0 (1.26)	-	
C6	-	-	35.0 (1.38)	-	

Electrak® XD – Performance Diagrams

Load vs. Current [1]

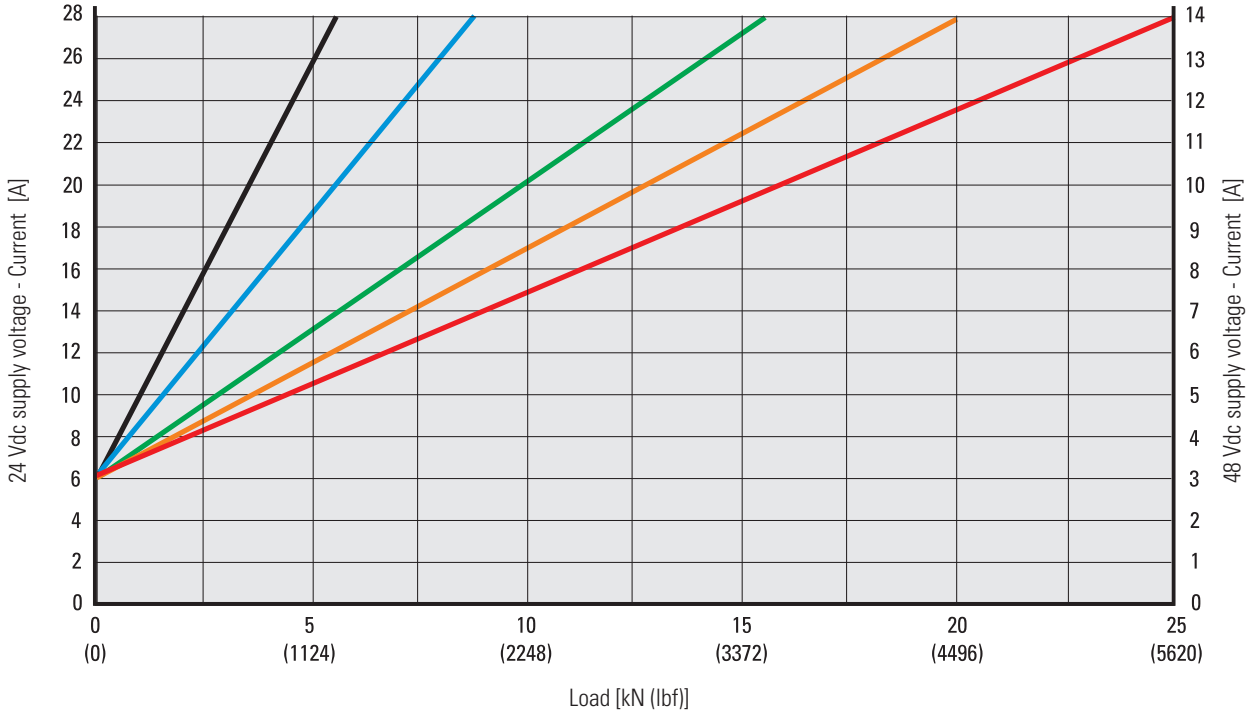

Dynamic Load vs. Stroke [2]

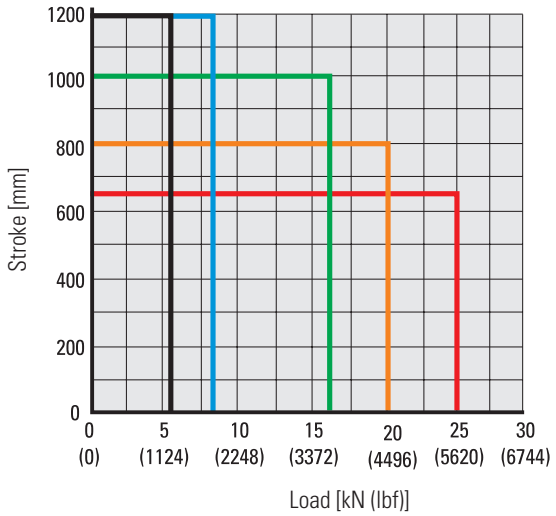

Static Compression Load vs. Stroke [3]

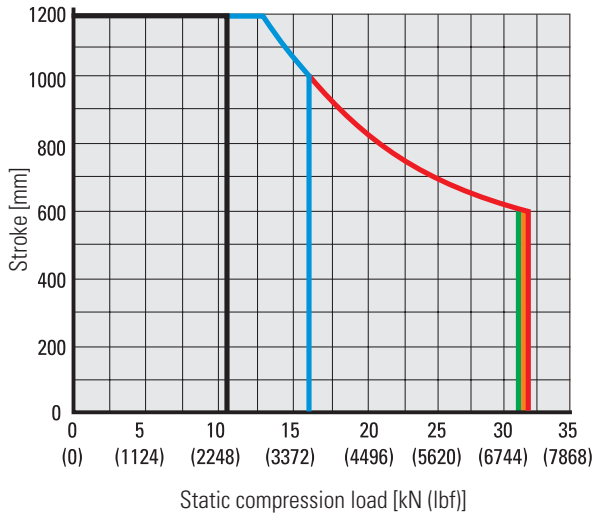

Actuator Dynamic Load Capacity Rating

5.5 kN (1236 lbf)	8.0 kN (1798 lbf)	16.0 kN (3597 lbf)	20.0 kN (4496 lbf)	25.0 kN (5620 lbf)

(1) Curves were generated at an ambient temperature of 25°C (77°F).
(2) Curves are for both tension and compression loads.
(3) Curves are for compression loads only except for 5.5 kN, which are also valid for tension loads. Contact customer support for non-compression type loads.

Load vs. Speed

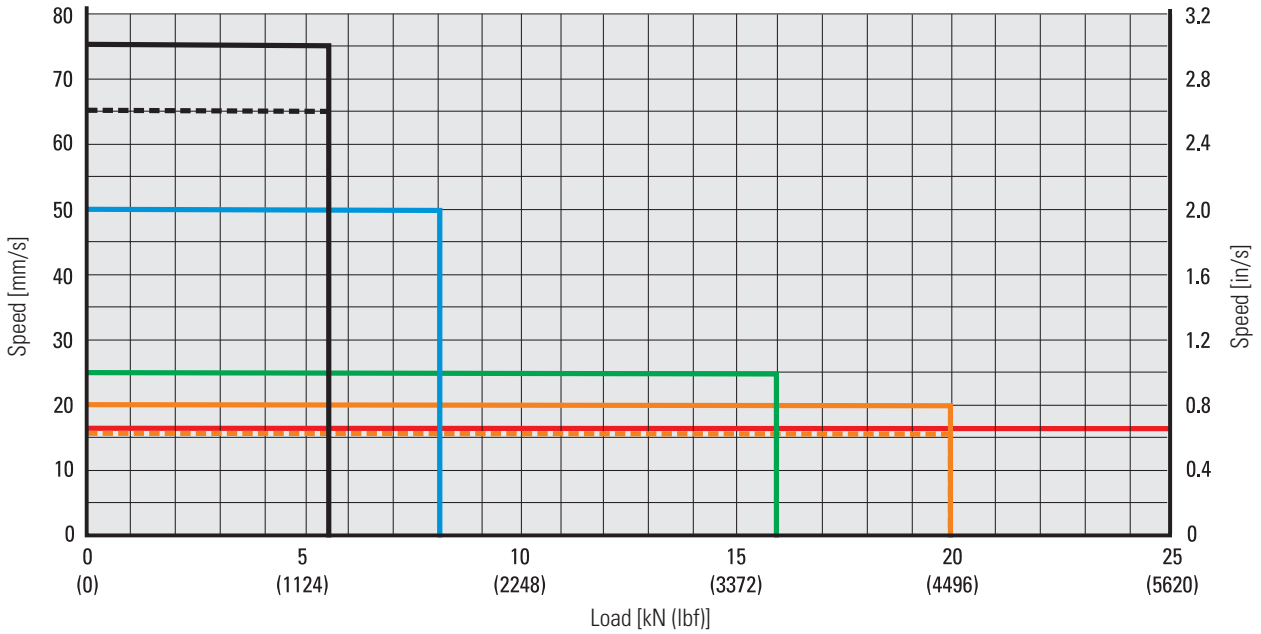

Actuator Dynamic Load Capacity Rating and Supply Voltage

24 Vdc	48 Vdc	24 / 48 Vdc	24 / 48 Vdc	24 Vdc	48 Vdc	24 / 48 Vdc
5.5 kN (1236 lbf)	5.5 kN (1236 lbf)	8.0 kN (1798 lbf)	16.0 kN (3597 lbf)	20.0 kN (4496 lbf)	20.0 kN (4496 lbf)	25.0 kN (5620 lbf)

Estimated Life vs. Load

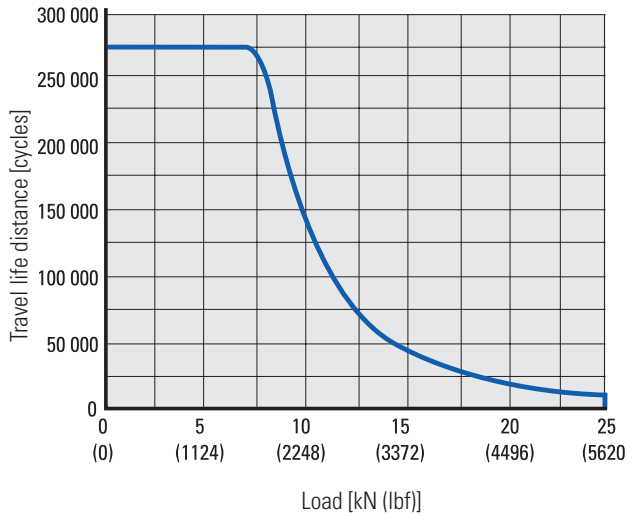

Duty Cycle

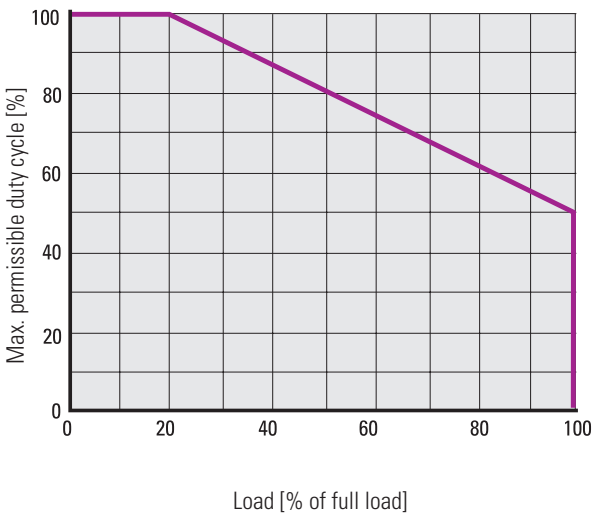

Estimation for a fully loaded unit with 300 mm stroke moving a resistive load in both directions at an ambient temperature of 20°C (68°F) and a duty cycle of 40%. A more accurate travel life calculation requires additional application information. Contact customer support for assistance.

Electrak® XD – Control Standard Features

All Electrak© XD controls, except for the CAN bus options (CNO and COO), have as a minimum the basic Electrak Monitoring Package features and low-level switching, speed control and optional force feedback capabilities as described below. This minimum configuration is called control option LXX.

Electrak Monitoring Package Features

The monitoring package includes:

- Current monitoring - shuts down the actuator on overload.
- Temperature and voltage monitoring - protects the actuator by preventing motion when temperature and/or voltage are outside of normal ranges.
- Temperature compensation - enables normal operation at low temperatures.
- Software controlled end-of-stroke limits - protect the actuator and ensure smooth stops.
- Dynamic braking - produces quick, repeatable stops with no coasting.

Low-level Switching

With low-level switching, the customer-supplied switches/relays that are connected to the extend and retract inputs only need to handle low-level signals and not the voltage and current of the motor.

Speed Control

If the speed control input is not used when the extend and retract inputs are active, the actuator will move at its full speed as long as the max. load is not exceeded. If a 0 - 5 Vdc signal is connected to the speed control input, the speed of the actuator can be regulated between 20 - 100% of its full speed where 0 - 0.5 V corresponds to full speed and 1 - 5 V corresponds to 20% of full speed up to full speed.

Speed vs. Speed Control Input Voltage

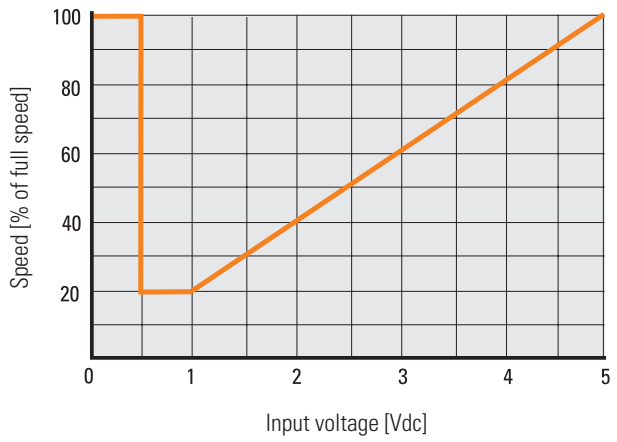

Force Feedback Output

In order to use the force feedback output, the actuator must be equipped with an integral force feedback sensor (rear adapter type K). The force output is a 0 - 5 Vdc signal where 2.5 V is zero force, 0.5 V is 25 kN compression force and 4.5 V is 25 kN tension force. Between 0.5 - 4.5 V, the output changes 1 mV per 12.5 N in change of force.

Force vs. Force Feedback Output Voltage

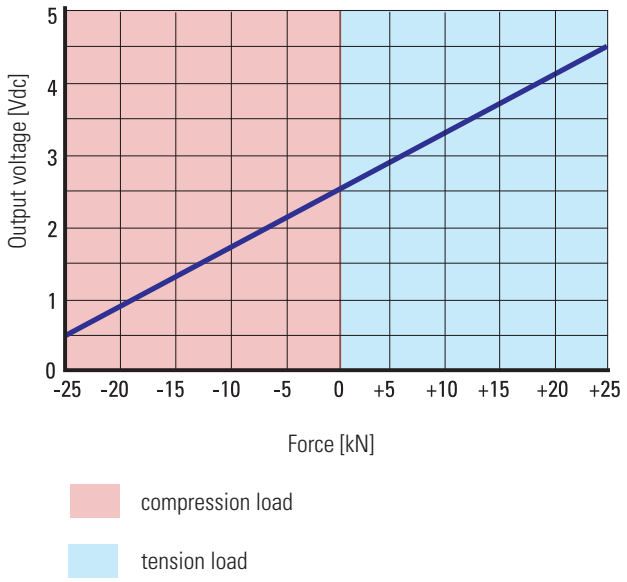

Electrak XD – Ordering Key

Ordering Key

1	2	3	4	5	6	7	8	9
XD24	**B055-**	**0200**	**LXX**	**-**	**M**	**M**	**S**	**N**

1. Model and input voltage
XD24 = Electrak XD, 24 Vdc
XD48 = Electrak XD, 48 Vdc

2. Dynamic load capacity, speed and max. stroke length (S)
B055- = 5.5 kN @ 75 mm/s, 1200 mm
B080- = 8.0 kN @ 50 mm/s, 1200 mm
B160- = 16 kN @ 25mm/s, 1000 mm
B200- = 20 kN @ 20 mm/s, 800 mm
B250- = 25 kN @ 16 mm/s, 650 mm

3. Ordering stroke length (S) (1) (2)
0100 = 100 mm
0150 = 150 mm
0200 = 200 mm
0250 = 250 mm
0300 = 300 mm
0350 = 350 mm
0400 = 400 mm
0450 = 450 mm
0500 = 500 mm
0550 = 550 mm
0600 = 600 mm
0650 = 650 mm
0700 = 700 mm
0750 = 750 mm
0800 = 800 mm
0900 = 900 mm
0950 = 950 mm
1000 = 1000 mm
1050 = 1050 mm
1100 = 1100 mm
1150 = 1150 mm
1200 = 1200 mm

4. Electrak Modular Control System options (3) (4)
LXX = low-level signal motor switching + speed control + force feedback output
LXP = LXX + position feedback output
LLX = LXX + end-of-stroke indication outputs
LLP = LXX + position feedback output + end-of-stroke indication outputs
PLS = LXX + position feedback output + programmable end-of-stroke limits
COO = CANopen® + closed loop speed control (includes diagnostics, position feedback, overload indication plus static and dynamic force feedback)
CNO = CAN bus SAE J1939 + closed loop speed control (includes diagnostics, position feedback, overload indication plus static and dynamic force feedback)

5. Manual Brake Release and Override Option
– = no manual brake release or override
R = manual brake release and override

6. Rear adapter option
M = 16 mm cross hole
N = 16 mm forked cross hole
H = M20 × 1.5 male thread
K = force feedback sensor with 16 mm cross hole (4) (5)

7. Front adapter option
M = 16 mm cross hole
N = 16 mm forked cross hole
H = M20 × 1.5 male thread
P = M20 × 1.5 female thread

8. Adapter orientation
S = standard
M = 90° turned

9. Mechanical shock load dampening (5)
N = no dampening
M = dampening

(1) Max. possible stroke length depends on the dynamic load capacity, see position 2.
(2) Other stroke lengths available upon request. Please contact customer support.
(3) All Electrak XD are as standard equipped with the Electronic Monitoring Package.
(4) To use the force feedback function, the actuator must be equipped with rear adapter type K.
(5) To equip the actuator with the mechanical shock load dampening option, it also must be equipped with the rear adapter type M. This configuration will render the actuator incompatible with the force feedback option as it requires rear adapter type K.

Electrak® XD – Mechanical Options

Manual Brake Release and Override Type R		
Weight of option	[kg (lbs)]	0.71 (1.56)
Manual brake release specifications		
Brake release lever pull operation force for full brake release	[N (lbf)]	40 (15)
Brake release lever operation pull distance for full brake release	[mm (in)]	10 (0.4]
Brake lever inside hole thread (a)		10-32"
Brake lever bracket mounting holes (b)		M5
Manual override specifications		
Required override input torque @ full load	[Nm (lbf-in)]	6 (53.1)
Max. permissible override input torque	[Nm (lbf-in)]	9 (79.7)
Max. override input speed	[rpm]	500
Linear movement / override input turn XDxx-B055 XDxx-B080 XDxx-B160 XDxx-B200 XDxx-B250	[mm]	 1.3 1.3 0.5 0.31 0.31
Rotational direction of the input clockwise seen from front counter clockwise seen from front		 tube extends tube retracts
Maximum run time	[min]	1
Cool-down time between operations	[min]	5
Manual override input hex key sizes cover plug (c) and override input shaft	[mm]	 8 8

Electrak© XD can be equipped with the manual brake release and override option, which allows the extension tube to be released and/or manually cranked back and forth.

Manual Brake Release

When engaged, the manual brake release will release the extension tube from the brake so that it can move freely. In case of a helping load, the operator must ensure releasing the extension tube will not create a hazardous situation since the tube will immediately move in the direction the force is acting.

It is also critical when releasing a helping load that the actuator is connected to a power source or any other device that can take the regenerated energy from the motor when it is acting as a generator. In order to operate the brake release lever, (a) must be pulled. The mounting holes (b) are provided so that a bracket can be easily installed as a support for a cable assembly used for remote lever operation. To release the brake completely, the lever needs to be pulled in 10 mm (0.4 in) with a force of 40 N (15 lbf). Shorter distance and lower force will open the brake partially and allow for a slower, more controlled movement.

Manual Override Input

Access is granted to the manual override shaft input head (c) by removing the cover plug. Using a hex bit as a crank allows the extension tube to be moved back and forth. Using the manual override does not require the manual brake release to be operated as the override input will disengage the brake by itself while being used. A power tool can be used to operate the manual override as long as it starts and stops smoothly and the input speed doesn't exceed 500 rpm. The override has a maximum run time of one minute and requires a five-minute cool-down between events.

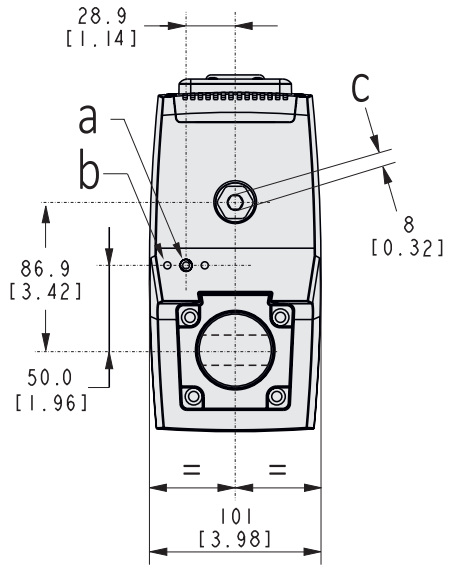

Shock Load Dampening Type M		
Max. shock load force	[kN (lbf)]	48 (10791)
Max. dampening distance (max. Ldd)	[mm (in)]	± 2.7 (0.11)
Weight of option	[kg (lbs)]	1.16 (2.56)
Operating temperature limits	[°C (F)]	- 40 – 85 (- 40 – 185)
Life expectancy		as the actuator
Maintenance		not required

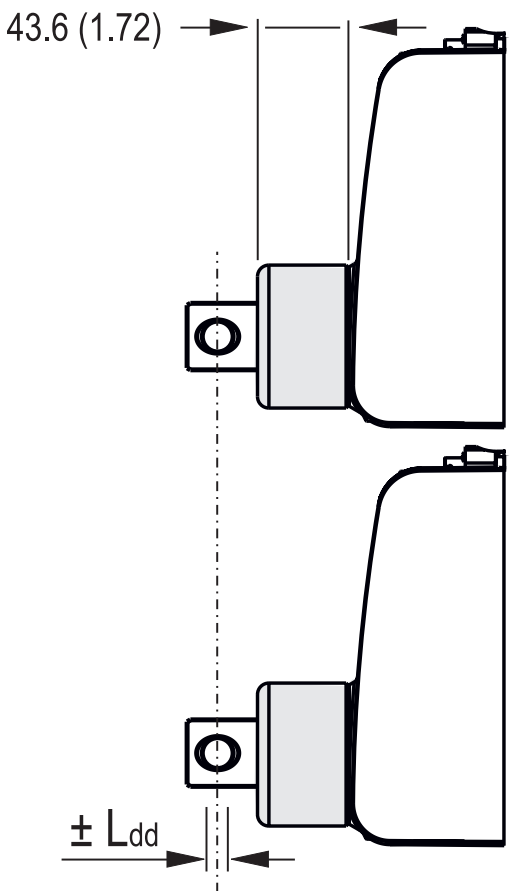

Electrak XD can be equipped with the shock load dampening option, which will absorb shock loads and thus increase the life of the actuator. The dampener consists of a rear adapter combined with a dampener unit that replaces the standard adapter, adding to the total length and weight of the actuator.

Shock Load Dampener

When an extension tube equipped with the shock load dampening option is subjected to a shock load, the dampener will be extended or compressed depending on the direction of the shock load force before returning to its original position. The distance is mainly related to the shock load force (as seen in the diagram), but the load, temperature, shock load speed and mounting position will also affect the distance.

Dampening Distance vs. Shock Load

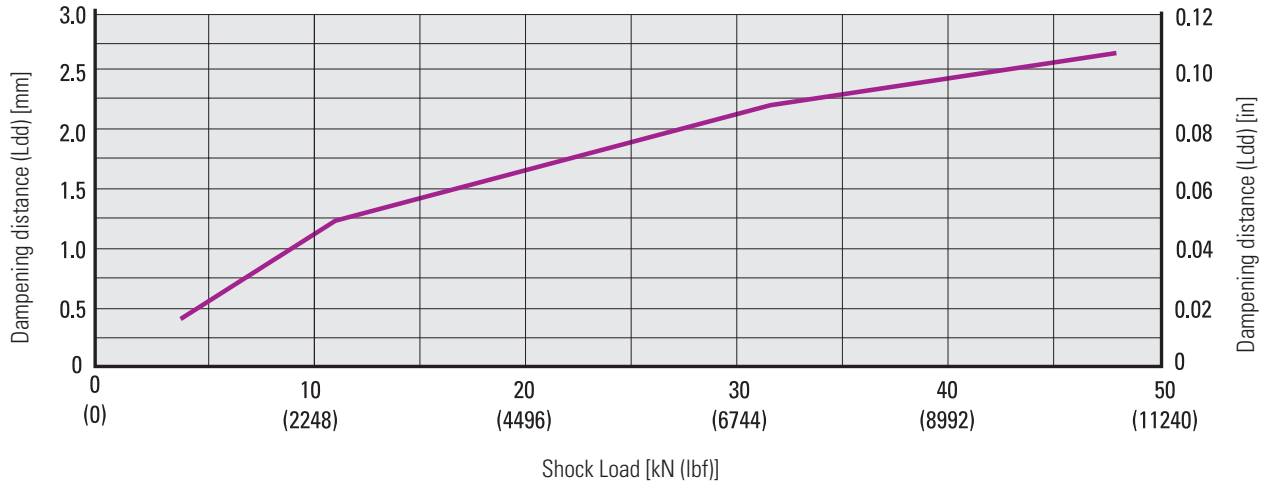

Electrak® XD – Control Options

All Control Options		
Actuator supply voltage limits XD24 XD48	[Vdc]	 18 - 32 36 - 60
Current draw @ min. / max. load XD24-Bxxx XD48-Bxxx	[A]	 6 / 28 3 / 14
End-of-stroke protection		yes
Overload protection		yes
Temperature monitoring		yes
Temperature compensation		yes
Voltage monitoring		yes
Current monitoring		yes
Speed control possible by supply voltage PWM		no

Fuse

Use a slow blow fuse on the supply voltage input wiring to protect the actuator and the wiring. Size it in accordance with local regulations and the current draw for the application in question.

Voltage Drop

Long supply wires may need an increased cross section in order to prevent the supply voltage to drop to levels below the supply voltage limit of the actuator. Calculations to determine the necessary cross section should take local regulations, application specifics and the actuator supply voltage limits into account.

Speed Control by Pulse Width Modulation (PWM)

The actuator speed can't be changed by PWM control of the supply voltage as the actuator may be harmed by this action. Speed of the actuator can only be controlled by using the speed control input or the CAN bus speed control commands.

Regeneration Current with Helping Load

When encountering a helping load, the motor acts as a generator and it is important to ensure that the power supply used can handle the power generated back by the motor.

Control Option Type LXX		
Extend / retract input voltage	[Vdc]	9 - 64
Extend / retract input current	[mA]	0.35 - 2.75
Speed control input voltage range	[Vdc]	0.5 - 5
Speed control range of full speed	[%]	20 - 100
Force feedback output voltage range *	[Vdc]	0.5 - 4.5
Force feedback linearity*	[%]	± 5
Force feedback resolution*	[N/mV]	12.5

*To be able to use the force feedback ouput the actuator need to be equipped with the rear adapter option type K that includes the force feedback sensor.

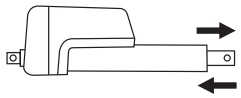

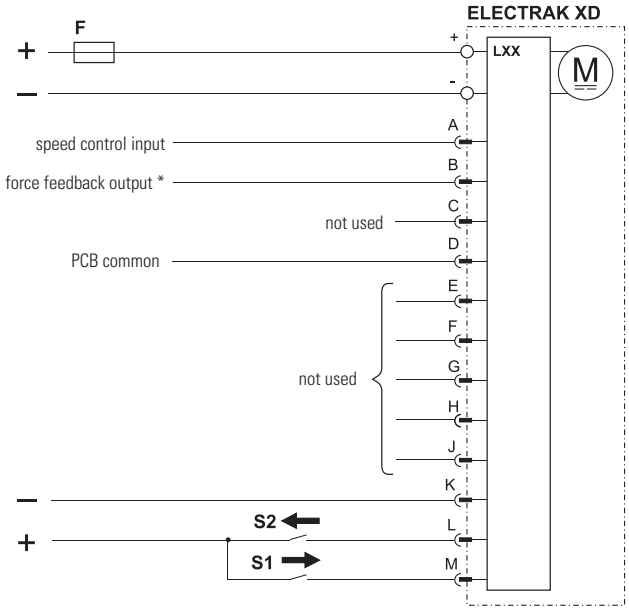

+ / - Supply voltage positive / negative
F Fuse
S1 Extend switch/relay
S2 Retract switch/relay

Control option LXX includes all of the basic Electrak Monitoring Package features plus low-level switching, speed control and force feedback capabilities [1].

(1) To be able to use the force feedback ouput the actuator need to be equipped with the rear adapter option type K that includes the force feedback sensor.

Control Option Type LLX

Extend / retract input voltage	[Vdc]	9 - 64
Extend / retract input current	[mA]	0.35 - 2.75
Speed control input voltage range	[Vdc]	0.5 - 5
Speed control range of full speed	[%]	20 - 100
Force feedback output voltage range	[Vdc]	0.5 - 4.5
Force feedback linearity	[%]	± 5
Force feedback resolution	[N/mV]	12.5
End-of-stroke output contact type		potential free
Max. end-of-stroke output voltage	[Vdc/ac]	30/120
Max. end-of-stroke output current	[mA]	100

*To be able to use the force feedback ouput the actuator need to be equipped with the rear adapter option type K that includes the force feedback sensor.

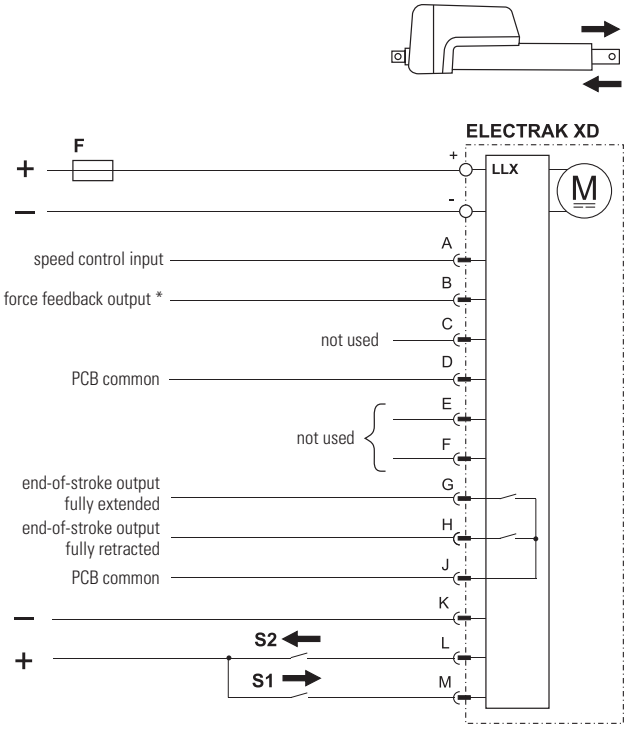

+ / - Supply voltage positive / negative
F Fuse
S1 Extend switch/relay
S2 Retract switch/relay

Control option LLX works as option LXX but also includes two end-of-stroke outputs that indicate when the extension tube is in its fully extended or retracted position.

Control Option Type LXP

Extend / retract input voltage	[Vdc]	9 - 64
Extend / retract input current	[mA]	0.35 - 2.75
Speed control input voltage range	[Vdc]	0.5 - 5
Speed control range of full speed	[%]	20 - 100
Force feedback output voltage range	[Vdc]	0.5 - 4.5
Force feedback linearity	[%]	± 5
Force feedback resolution	[N/mV]	12.5
Position feedback output voltage	[Vdc]	0.5 - 4.5
Position feedback linearity	[%]	± 0.25
Position feedback resolution	[mm/V]	ordering stroke length (S) [mm] / 4

*To be able to use the force feedback ouput the actuator need to be equipped with the rear adapter option type K that includes the force feedback sensor.

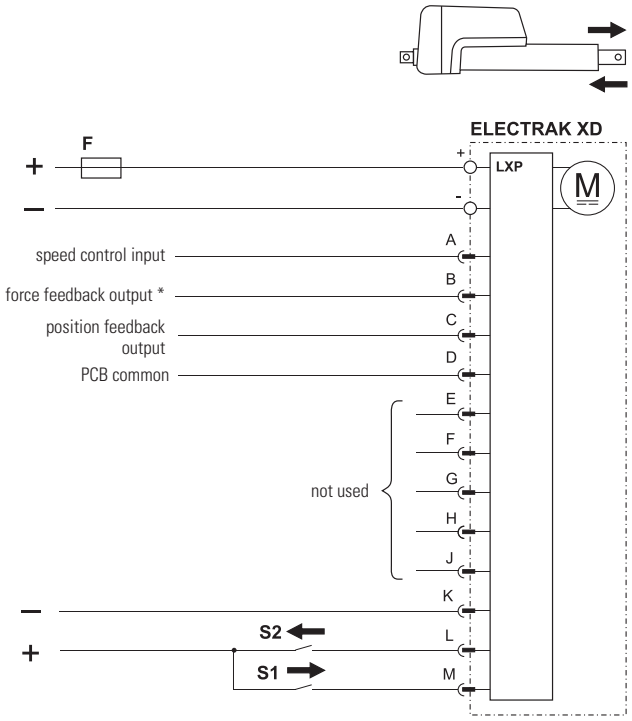

+ / - Supply voltage positive / negative
F Fuse
S1 Extend switch/relay
S2 Retract switch/relay

Control option LXP works as option LXX but also includes an analog position output that will provide feedback on the extension tube position.

Electrak® XD – Control Options

Control Option Type LLP

Extend / retract input voltage	[Vdc]	9 - 64
Extend / retract input current	[mA]	0.35 - 2.75
Speed control input voltage range	[Vdc]	0.5 - 5
Speed control range of full speed	[%]	20 - 100
Force feedback output voltage range*	[Vdc]	0.5 - 4.5
Force feedback linearity*	[%]	± 5
Force feedback resolution*	[N/mV]	12.5
End-of-stroke output contact type		potential free
Max. end-of-stroke output voltage	[Vdc/ac]	30/120
Max. end-of-stroke output current	[mA]	100
Position feedback output voltage	[Vdc]	0.5 - 4.5
Position feedback linearity	[%]	± 0.25
Position feedback resolution	[mm/V]	ordering stroke length (S) [mm] / 4

*To be able to use the force feedback ouput the actuator need to be equipped with the rear adapter option type K that includes the force feedback sensor.

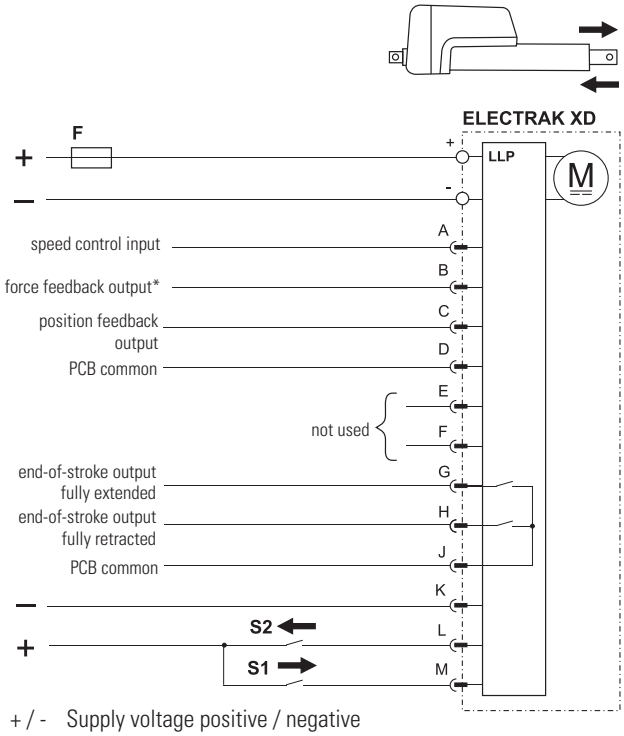

+ / - Supply voltage positive / negative
F Fuse
S1 Extend switch/relay
S2 Retract switch/relay

Control option LLP works as option LXP but also includes two end-of-stroke outputs that indicate when the extension tube is in its fully extended or retracted position.

Control Option Type PLS

Extend / retract input voltage	[Vdc]	9 - 64
Extend / retract input current	[mA]	0.35 - 2.75
Speed control input voltage range	[Vdc]	0.5 - 5
Speed control range of full speed	[%]	20 - 100
Force feedback output voltage range*	[Vdc]	0.5 - 4.5
Force feedback linearity*	[%]	± 5
Force feedback resolution*	[N/mV]	12.5
Position feedback output voltage	[Vdc]	0.5 - 4.5
Position feedback linearity	[%]	± 0.25
Position feedback resolution	[mm/V]	ordering stroke length (S) [mm] / 4

*To be able to use the force feedback ouput the actuator need to be equipped with the rear adapter option type K that includes the force feedback sensor.

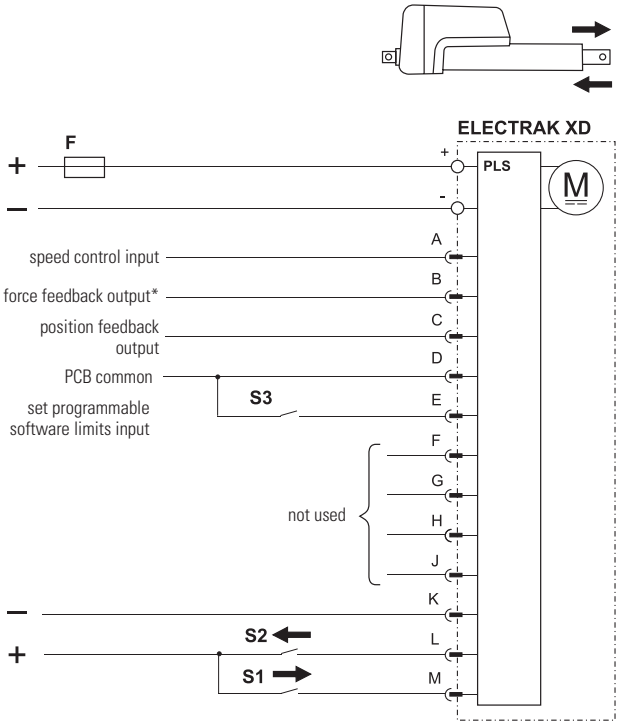

+ / - Supply voltage positive / negative
F Fuse
S1 Extend switch/relay
S2 Retract switch/relay
S3 Set programmable software limits switch

Control option PLS works as option LXP but also includes programmable software extend and retract limits.

Control Option Type CNO and COO

Command data includes:
- position
- speed
- current

Feedback data includes:
- position
- speed
- current
- force (the actuator must also be equipped with the force feedback rear adapter type K)
- other diagnostic information

Extend / retract input voltage	[Vdc]	9 - 64
Extend / retract input current	[mA]	0.35 - 2.75

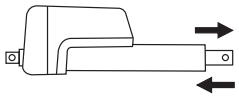

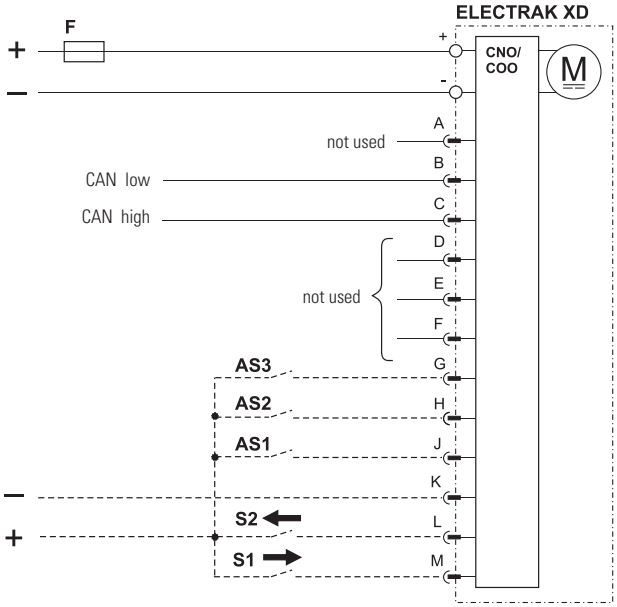

+ / - Supply voltage positive / negative
F Fuse
S1 Manual extend switch/relay (optional)
S2 Manual retract switch/relay (optional)
AS1 Address selection switch for binary position 1
AS2 Address selection switch for binary position 2
AS3 Address selection switch for binary position 3

Control option CNO includes a SAE J1939 CAN bus control interface, COO includes a CANopen® control interface that controls and monitors the actuator. Movement commands are sent via CAN messages on the CAN low and CAN high inputs. Inputs on pins G, H and J can be used as a binary coded decimal (BCD) adder to change the default address of the actuator. This option can be used when multiple CAN bus actuators are located on a single bus. The actuator can be manually forced to extend or retract by using the inputs on pin L and M. When the manual control inputs are used, CAN bus control messages are ignored, but the unit will still provide CAN bus feedback messages. When the inputs are left floating, CAN bus functionality for control messages is restored. When using the address inputs and/or the manual extend and retract switches, pin K must be connected to supply voltage negative.

Electrak® XD – Accessories

Signal Cable and Connector Harness		
Length without connector	[mm (in)]	1500 (59)
Lead cross section/size	[mm^2 (AWG)]	0.5 (20)
Pin to lead color		A - pink B - brown C - blue D - black E - orange/black F - yellow/black G - white H - red J - green K - grey L - orange M - violet
Part number		954-9476

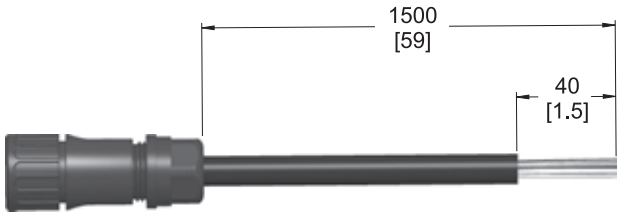

Notes

Electrak® HD – Technical Features

SMART

Standard Features

- Onboard electronics with many optional functions
- Static load up to 18 kN (4050 lbf)
- Dynamic load up to 16 kN (3584 lbf)
- Stroke up to 1000 mm
- Speed up to 71 mm/s (2.8 in/s)
- Protection class static IP67 / IP69K and dynamic IP66 and tested for 500 hour salt spray resistance

General Specifications

Screw type	ball
Nut type	load lock ball nut
Manual override	yes
Anti-rotation	yes
Static load holding brake	yes
Safety features	Electrak monitoring package: current monitoring voltage monitoring temperature monitoring load trip point calibration internal end-of-stroke limit switches(1) end-of-stroke dynamic braking
Electrical connections (2)	cable(s) with flying leads
Compliances	CE. UKCA, RoHS, REACH

(1) Dynamic braking is included at the ends of stroke for all Electrak HD actuators. Dynamic braking offered throughout the entire stroke length only on low-level switching and SAE J1939 options.
(2) There are one or two cables depending on the control option used. The cable(s) enters the actuator via a connector. The replacement of an actuator can be completed by unplugging the old actuator and plugging in the new one.

Optional Mechanical Features

Variety of front and rear adapters
Alternative adapter orientation

Optional Electronic Control Features

CANopen® CAN bus
SAE J1939 CAN bus
Synchronization option
Low-level switching
Programmable limit switches
Signal-follower
End-of-stroke indication output
Analog position output
Digital position output

Control Option Combinations

EXX	Electrak Monitoring Package only
ELX	EXX + End-of-Stroke Indication Output
EXP	EXX + Analog Position Output
EXD	EXX + Digital Position Output
ELP	ELX + Analog Position Output
ELD	ELX + Digital Position Output
LXX	EXX + Low-Level Signal Motor Switching
LLX	EXX + LXX + End-of-Stroke Indication Output
LXP	EXX + LXX + Analog Position Output
LPS	EXX + LXX + Programmable Limit Switches + Signal-Follower
CNO	SAE J1939 CAN Bus Control + Open-Loop Speed Control
COO	CANopen CAN Bus Control + Open-Loop Speed Control
SY2	Synchronization Option

Accessories

Rod end front adapter
External slot-mounted limit switches

Cable Definitions

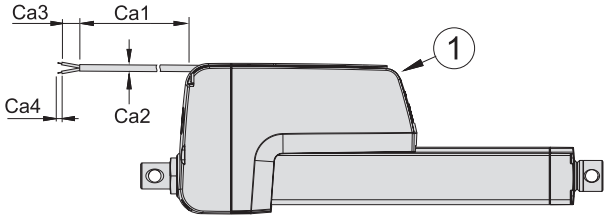

The drawing shows the cables exiting the cable slots at the end of the actuator housing, which is the shipping position. The user can adjust the exit point to be anywhere between the connector (1) in the front of the housing and the end of the cable slots.

Electrak HD – Technical Specifications

Mechanical Specifications

Parameter		Electrak HD
Max. static load [1]	[kN (lbs)]	18 (4050)
Max. dynamic load (Fx)	[kN (lbs)]	
HDxx-B017		1.7 (382)
HDxx-B026		2.6 (585)
HDxx-B045		4.5 (1012)
HDxx-B068		6.8 (1529)
HDxx-B100		10 (2248)
HDxx-B160		16 (3584)
Speed @ no load/max. load [2]	[mm/s (in/s)]	
HDxx-B017		71/58 (2.8/2.28)
HDxx-B026		40/32 (1.6/1.3)
HDxx-B045		24/19 (0.94/0.75)
HDxx-B068		18/14 (0.71/0.55)
HDxx-B100		11/9 (0.43/0.35)
HDxx-B160		7/5 (0.27/0.21)
Min. ordering stroke (S) length	[mm]	100
Max. ordering stroke (S) length [3]	[mm]	1000
Ordering stroke length increments	[mm]	50
Operating temperature limits	[°C (F)]	- 40 – 85 (- 40 – 185)
Full load duty cycle @ 25 °C (77 °F)	[%]	25 [4]
End play, maximum	[mm (in)]	1.2 (0.047)
Restraining torque	[Nm (lbs)]	0
Protection class - static (dynamic)		IP67/IP69K (IP66)
Salt spray resistance	[h]	500

[1] Max. static load at fully retracted stroke.
[2] For units with the synchronization option, the speed will vary slightly when synchronizing, but will typically remain close to the speed they are rated for at full load. See page ?? for more information on the synchronization option.
[3] 500 mm max. for 16 kN.
[4] For HDxx-B100 and HDxx-160 load, the duty cycle is 15%.
[5] Do not use PWM voltage for speed control to avoid damaging the onboard electronics.
[6] See previous page for cable definitions.

Electrical Specifications

Parameter		Electrak HD
Available input voltages [5]	[Vdc]	12, 24, 48
Input voltage tolerance	[Vdc]	
HD12 (12 Vdc input voltage)		9 - 16
HD24 (24 Vdc input voltage)		18 - 32
HD48 (48 Vdc input voltage)		36 - 64
Current draw @ no load/max. load	[A]	
HD12-B017		3/18
HD24-B017		1.5/9
HD48-B017		0.75/4.5
HD12-B026		3/18
HD24-B026		1.5/9
HD48-B026		0.75/4.5
HD12-B045		3/18
HD24-B045		1.5/9
HD48-B045		0.75/4.5
HD12-B068		3/20
HD24-B068		1.5/10
HD48-B068		0.75/5
HD12-B100		3/18
HD24-B100		1.5/9
HD48-B100		0.75/4.5
HD12-B160		3/20
HD24-B160		1.5/10
HD48-B160		0.75/5
Motor leads cross section	[mm² (AWG)]	2 (14)
Signal leads cross section	[mm² (AWG)]	0.5 (20)
Standard cable lengths (Ca1) [6]	[m (in)]	0.3, 1.5, 5 (11.8, 59, 197)
Cable diameter (Ca2) [6]	[mm (in)]	7.5 (.295)
Flying lead length (Ca3) [6]	[mm (in)]	76 (3)
Stripped lead length (Ca4) [6]	[mm (in)]	6 (0.25)

Actuator Weight [kg]

Maximum Dynamic Load (Fx) [kN (lbs)]	Ordering Stroke (S) [mm]																		
	100	150	200	250	300	350	400	450	500	550	600	650	700	750	800	850	900	950	1000
1.7 (382)	6.5	6.7	7.0	7.2	7.5	7.7	8.0	8.2	8.5	8.7	9.0	9.2	9.5	9.7	10.0	10.2	10.5	10.7	11.0
2.6 (585)	6.5	6.7	7.0	7.2	7.5	7.7	8.0	8.2	8.5	8.7	9.0	9.2	9.5	9.7	10.0	10.2	11.6	11.9	12.2
4.5 (1012)	6.5	6.7	7.0	7.2	7.5	7.7	8.0	8.2	8.5	8.7	9.0	9.2	10.4	10.7	11.0	11.3	11.6	11.9	12.2
6.8 (1592)	6.5	6.7	7.0	7.2	7.5	7.7	8.0	8.2	8.5	9.5	9.8	10.1	10.4	10.7	11.0	11.3	11.6	11.9	12.2
10 (2248)	6.7	7.0	7.2	7.5	7.7	8.0	8.2	9.1	9.4	9.7	10.0	10.3	10.6	10.9	11.2	11.5	11.8	12.1	12.4
16 (3584)	8.1	8.3	8.5	8.7	8.9	9.1	9.3	9.5	9.7										

Conversion Factors: Millimeter to inch: 1 mm = 0.03937 in, kilogram to pound: 1 kg = 2.204623 lbs

Electrak® HD – Dimensions

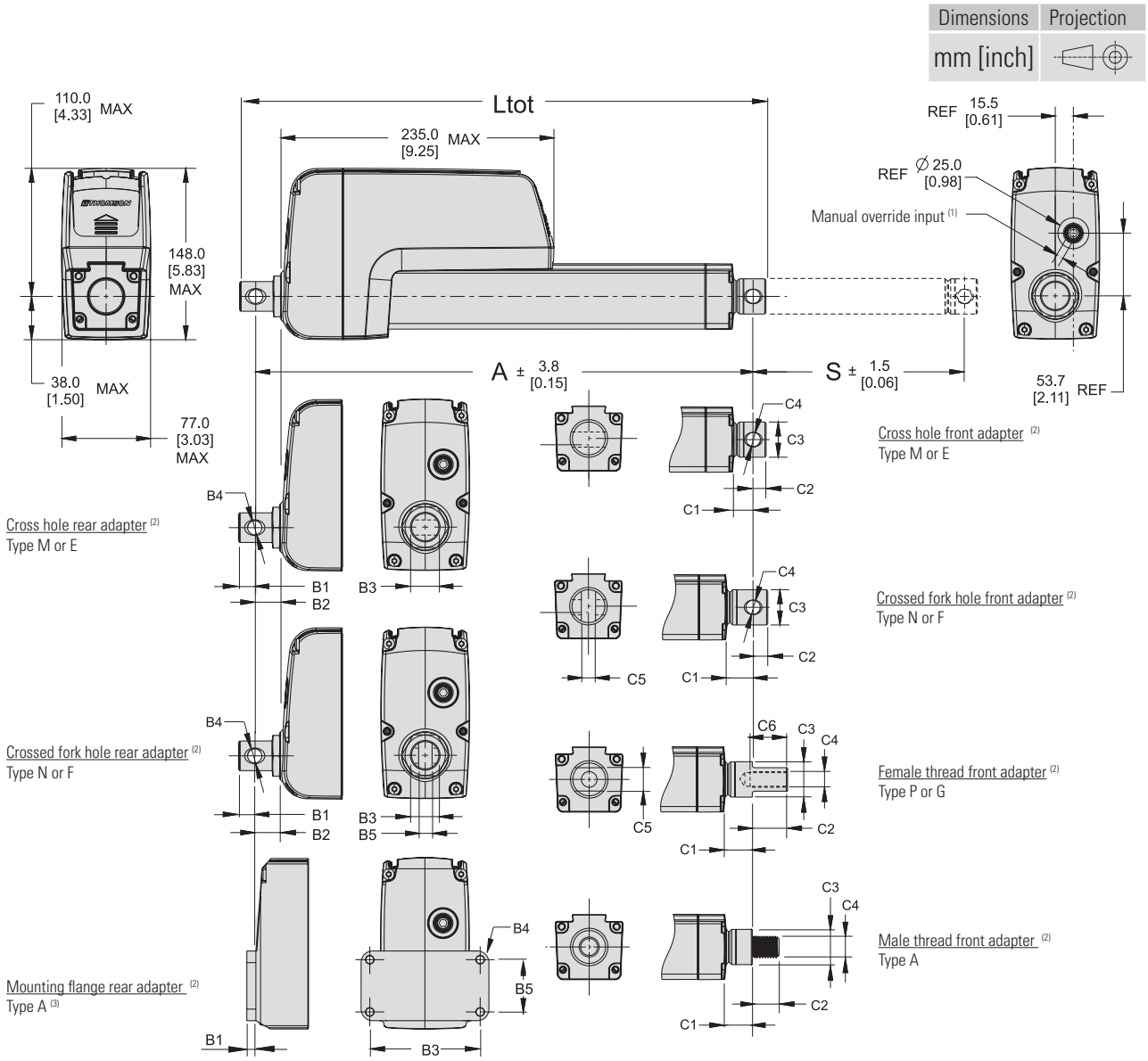

Rear and Front Adapter Dimensions [mm]

	Rear Adapter Types						Front Adapter Types						
	M	E	N	F	A (3)		M	E	N	F	P	G	A
B1	13.4	13.4	13.4	13.4	7.8	C1	see table on next page						16.5
B2	21.6	21.6	21.6	21.6	-	C2	10.9	10.9	12.9	12.9	30.0	30.0	20.0
B3	25.4	25.4	25.4	25.4	95.0	C3	see table on next page						
B4	12.2	12.8	12.2	12.8	6.6	C4	12.2	12.8	12.2	12.8	M12 × 1.75	1/2-20 UNF-2B	M16 × 2
B5	-	-	8.2	8.2	45.0	C5	-	-	8.2	8.2	19.0	19.0	-
						C6	-	-	-	-	35.0	35.0	-

(1) The input hole is covered with a plastic threaded plug. When removed, a 6 mm socket can be inserted and used as a crank.
(2) All adapters shown in the standard orientation.
(3) Rear mounting flange type A cannot be ordered with a higher maximum static load capacity than 10 kN or/and a maximum stroke of 300 mm.

Maximum Dynamic Load and Stroke Relationships

Maximum Dynamic Load (Fx) - kN (lbf.)	Total Length (Ltot), Retracted Length (A) and Front Adapter Dimensions [mm]		Ordering Stroke (S) [mm]				
			50 – 500 (1)	550 – 600	650 – 700	750 – 900	950 – 1000
1.7 (382)	Ltot		A + B1 + C2				
	A		S + 150.9 + B2 + C1				
	C1	Type M, E	17.5				
		Type N, F	26.5				
		Type P, G	23.9				
	C3		30.2				
2.6 (585)	Ltot		A + B1 + C2				A + B1 + C2
	A		S + 150.9 + B2 + C1				S + 156.8 + B2 + C1
	C1	Type M, E	17.5				24.0
		Type N, F	26.5				27.0
		Type P, G	23.9				24.9
	C3		30.2				35.0
4.5 (1012)	Ltot		A + B1 + C2			A + B1 + C2	
	A		S + 150.9 + B2 + C1			S + 156.8 + B2 + C1	
	C1	Type M, E	17.5			24.0	
		Type N, F	26.5			27.0	
		Type P, G	23.9			24.9	
	C3		30.2			35.0	
6.8 (1529)	Ltot		A + B1 + C2		A + B1 + C2		
	A		S + 150.9 + B2 + C1		S + 156.8 + B2 + C1		
	C1	Type M, E	17.5		24.0		
		Type N, F	26.5		27.0		
		Type P, G	23.9		24.9		
	C3		30.2		35.0		
10 (2248)	Ltot		A + B1 + C2	A + B1 + C2			
	A		S + 180.9 + B2 + C1	S + 182 + B2 + C1			
	C1	Type M, E	17.5	24.0			
		Type N, F	26.5	27.0			
		Type P, G	23.9	24.9			
	C3		30.2	35.0			
16 (3584)	Ltot		A + B1 + C2	strokes not available for this model			
	A		S + 182 + B2 + C1				
	C1	Type M, E	24.0				
		Type N, F	27.0				
		Type P, G	24.9				
	C3		35.0				

(1) For a unit with 50 mm stroke, A and Ltot dimension are the same as for a unit with 100 mm stroke.

Electrak® HD – Performance Diagrams

Load vs. Speed [1]

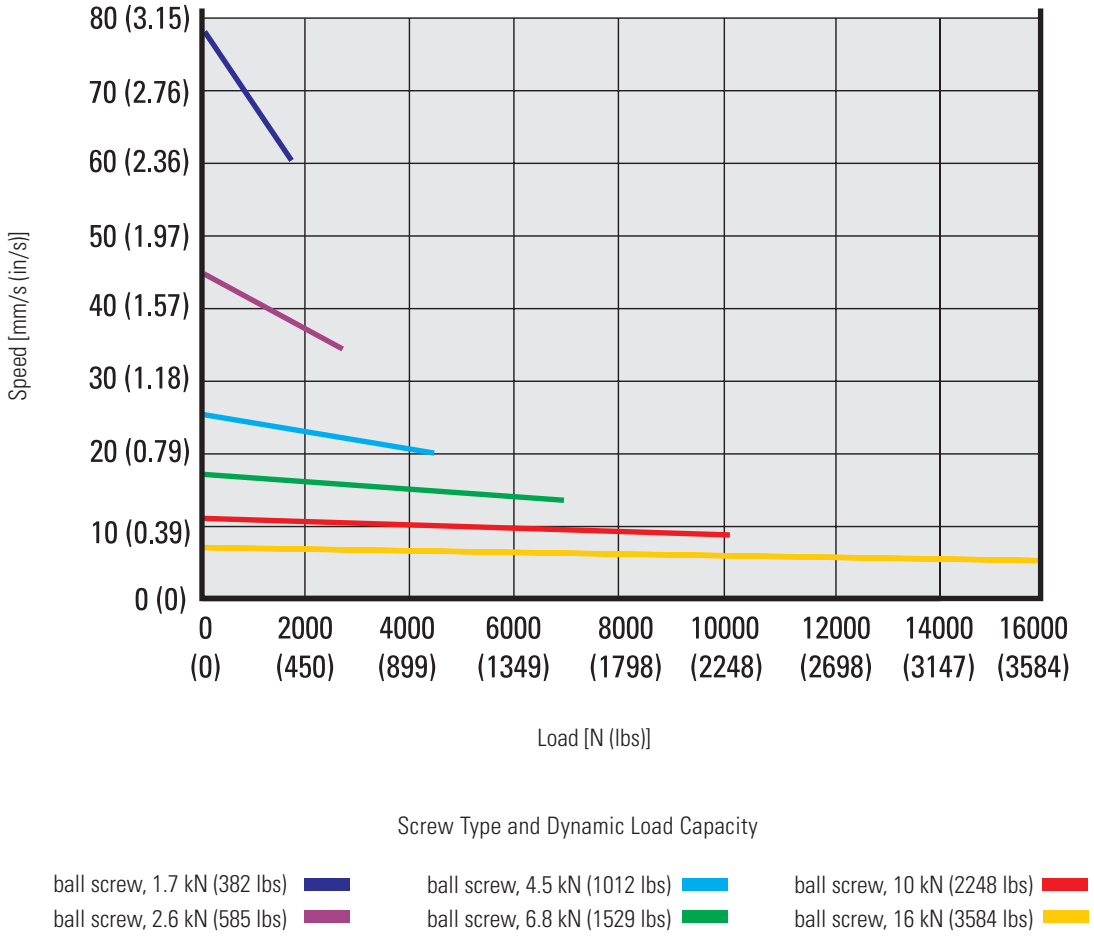

[1] Curves valid for all units except those with the synchronization option, where the speed may vary, but will typically remain close to the speed they are rated for at full load, even if they are running at a lower load.

Note! Curves were generated at an ambient temperature of 21°C (70°F). Different ambient temperature and individual actuator characteristics can produce slightly different values.

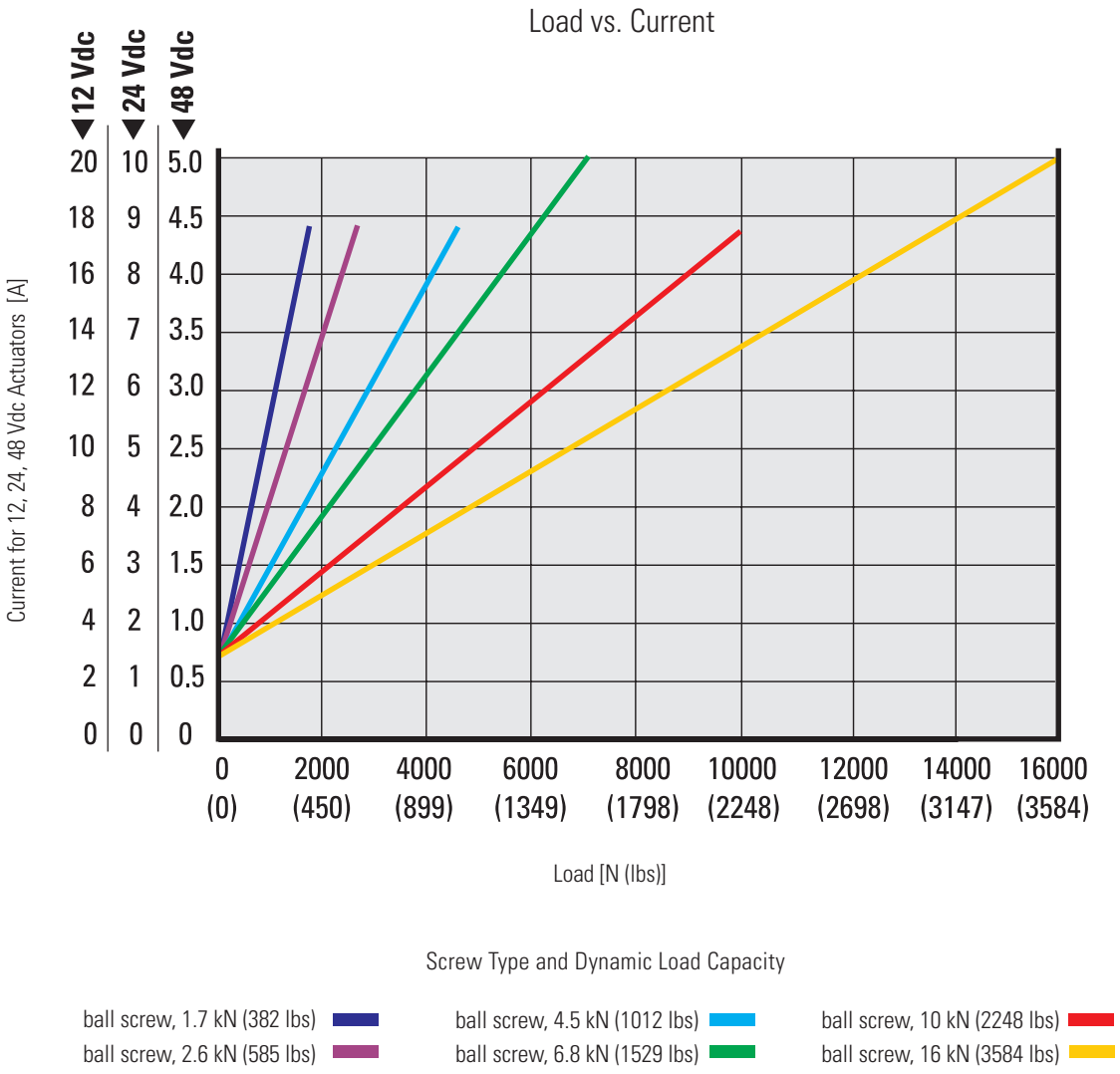

Note! Curves were generated at an ambient temperature of 21°C (70°F). Different ambient temperature and individual actuator characteristics can produce slightly different values.

Electrak® HD – Ordering Key

Ordering Key

1	2	3	4	5	6	7	8	9
HD12	**B026-**	**0300**	**LXX**	**2**	**M**	**M**	**S**	**D**

1. Model and input voltage
HD12 = Electrak HD, 12 Vdc
HD24 = Electrak HD, 24 Vdc
HD48 = Electrak HD, 48 Vdc

2. Screw type, dynamic load capacity
B017- = ball screw, 1.7 kN (382 lbf)
B026- = ball screw, 2.6 kN (585 lbf)
B045- = ball screw, 4.5 kN (1012 lbf)
B068- = ball screw, 6.8 kN (1529 lbf)
B100- = ball screw, 10 kN (2248 lbf)
B160- = ball screw, 16 kN (3584 lbf)

3. Ordering stroke length [1] [2]
0050 = 50 mm [3]
0100 = 100 mm
0150 = 150 mm
0200 = 200 mm
0250 = 250 mm
0300 = 300 mm
0350 = 350 mm
0400 = 400 mm
0450 = 450 mm
0500 = 500 mm
0550 = 550 mm
0600 = 600 mm
0650 = 650 mm
0700 = 700 mm
0750 = 750 mm
0800 = 800 mm
0850 = 850 mm
0900 = 900 mm
0950 = 950 mm
1000 = 1000 mm

(1) Other stroke lengths available upon request. Please contact customer support.
(2) 500 mm is the max. stroke length for 16 kN units.
(3) 50 mm stroke units will have same retracted length and envelope size as a 100 mm unit.
(4) Max. ordering stroke for the rear mounting flange type A is 300 mm.
(5) Max. dynamic load capacity for the rear mounting flange type A is 10 kN.

4. Electrak Modular Control System options

Options available for HD12 and HD24 only
EXX = Electronic Monitoring Package only
ELX = EXX + end-of-stroke indication output
EXP = EXX + analog (potentiometer) position output
EXD = EXX + digital position output
ELP = ELX + analog (potentiometer) position output
ELD = ELX + digital position output
LPS = EXX + LXX + programmable limit switches + signal-follower

Options available for HD12, HD24 and HD48
LXX = EXX + low-level signal motor switching
LLX = EXX + LXX + end-of-stroke indication output
LXP = EXX + LXX + analog (potentiometer) position output
CNO = SAE J1939 CAN bus + open-loop speed control
COO = CANopen CAN bus + open-loop speed control
SY2 = LXX + synchronization option

5. Cable length
1 = 0.3 m long cables
2 = 1.5 m long cables
3 = 5.0 m long cables

6. Rear adapter/mounting flange options
A = rear mounting flange [4] [5]
M = cross hole for 12 mm pin
E = cross hole for ½ inch pin
N = forked cross hole for 12 mm pin
F = forked cross hole for ½ inch pin

7. Front adapter options
A = metric M16 male thread
M = cross hole for 12 mm pin
E = cross hole for ½ inch pin
N = forked cross hole for 12 mm pin
F = forked cross hole for ½ inch pin
P = metric M12 female thread
G = inch 1/2-20 UNF-2B female thread

8. Adapter orientation
S = standard
M = 90 ° turned

9. Connection options
D = flying leads

Electrak HD – Electrical Connections

Option Type EXX

Actuator supply voltage	[Vdc]	
HD12		9 - 16
HD24		18 - 32
HD48		-

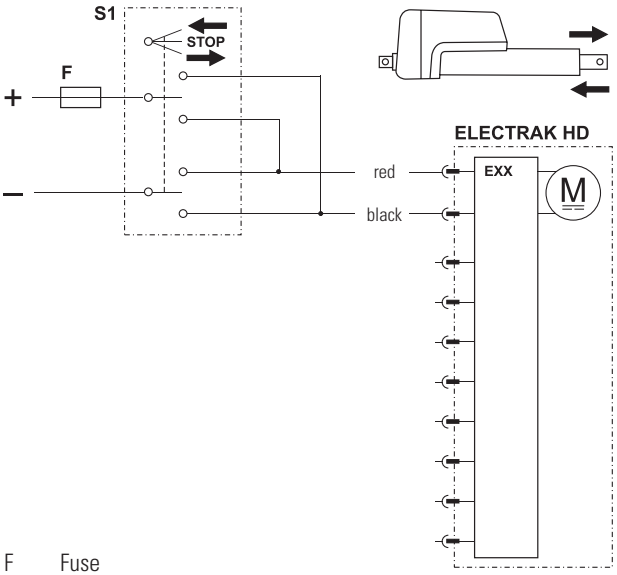

F Fuse
S1 Double pole double throw switch

Control option EXX contains Electrak Monitoring Package features, guaranteeing safe operation of the actuator and equipment. With control option EXX, the polarity of the motor voltage is switched by a customer-supplied switch (switch, relay, etc.) to make the actuator extend or retract. The switch, power supply, wiring and all other components must be able to handle the motor current for the actuator model and load being used, as well as the inrush current (up to three times the max. continuous current for the max. load being used for up to 150 milliseconds).

Option Type ELX

Actuator supply voltage	[Vdc]	
HD12		9 - 16
HD24		18 - 32
HD48		-
Output contact type		potential free
Max. output voltage	[Vdc/ac]	30/120
Max. output current	[mA]	100

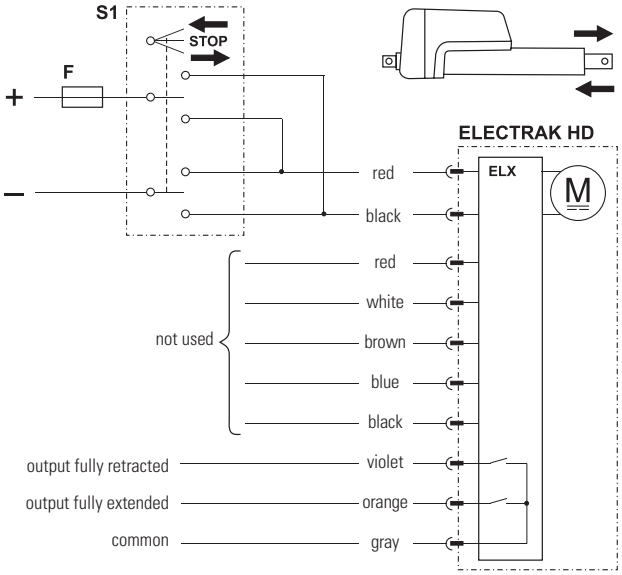

F Fuse
S1 Double pole double throw switch

Control option ELX works as option EXX but also has two outputs that indicate when the extension tube is in its fully extended or retracted position.

Electrak® HD – Electrical Connections

Option Type EXP

Actuator supply voltage	[Vdc]	
HD12		9 - 16
HD24		18 - 32
HD48		-
Potentiometer type		wire-wound
Potentiometer max. input voltage	[Vdc]	32
Potentiometer max. power	[W]	1
Potentiometer linearity	[%]	± 0.25
Potentiometer output resolution	[ohm/mm]	
50 - 100 mm stroke		65.6
150 - 250 mm stroke		32.8
300 - 500 mm stroke		19.7
550 - 1000 mm stroke		9.8

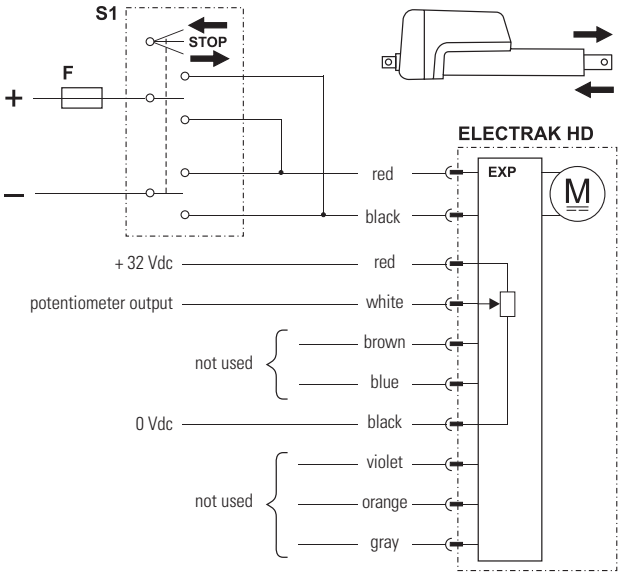

F Fuse
S1 Double pole double throw switch

Control option EXP works as option EXX but also has an analog (potentiometer) output that will provide feedback on the extension tube position.

Option Type EXD

Actuator supply voltage	[Vdc]	
HD12		9 - 16
HD24		18 - 32
HD48		-
Encoder type		hall effect
Encoder input voltage	[Vdc]	4 - 24
Encoder output voltage levels	[Vdc]	
low (logical zero), typical / max.		0.1 / 0.25
Encoder resolution	[mm/pulse]	
HDxx-B017		0.28
HDxx-B026		0.15
HDxx-B045		0.09
HDxx-B068		0.07
HDxx-B100		0.04
HDxx-B160		0.03

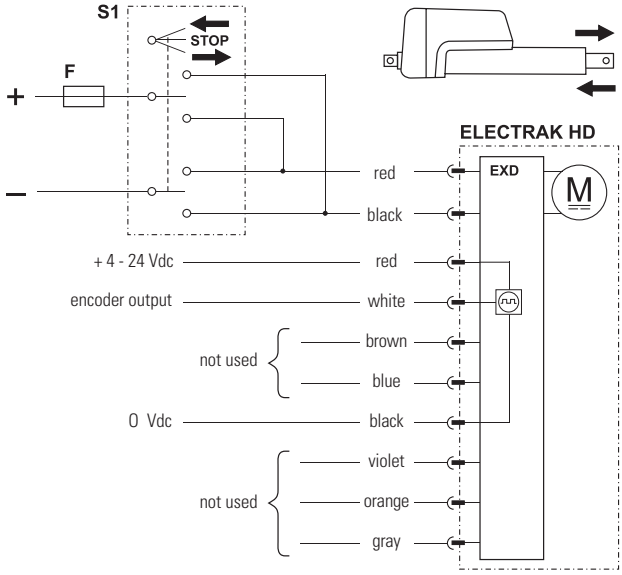

F Fuse
S1 Double pole double throw switch

Control option EXD works as option EXX but also has a single-channel encoder output that will provide feedback on the extension tube position.

Option Type ELP

Actuator supply voltage HD12 HD24 HD48	[Vdc]	 9 - 16 18 - 32 -
Output contact type		potential free
Max. output voltage	[Vdc/ac]	30/120
Max. output current	[mA]	100
Potentiometer type		wire-wound
Potentiometer max. input voltage	[Vdc]	32
Potentiometer max. power	[W]	1
Potentiometer linearity	[%]	± 0.25
Potentiometer output resolution 50 - 100 mm stroke 150 - 250 mm stroke 300 - 500 mm stroke 550 - 1000 mm stroke	[ohm/mm]	 65.6 32.8 19.7 9.8

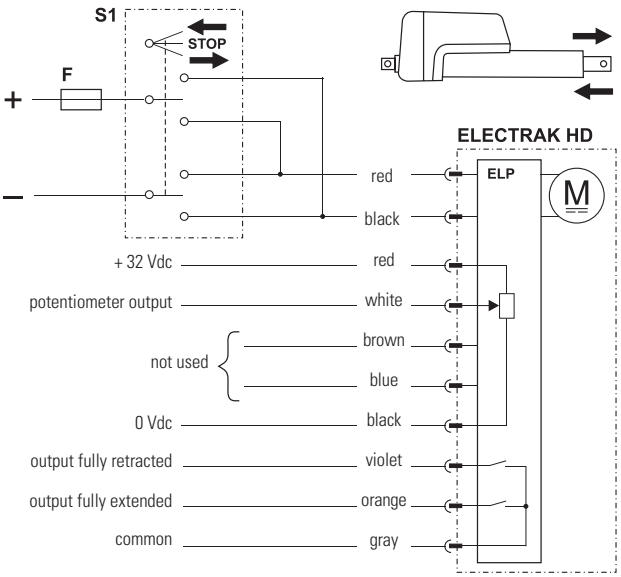

F Fuse
S1 Double pole double throw switch

Control option ELP works as option EXP but also has two outputs that indicate when the extension tube is in its fully extended or retracted position.

Option Type ELD

Actuator supply voltage HD12 HD24 HD48	[Vdc]	 9 - 16 18 - 32 -
Output contact type		potential free
Max. output voltage	[Vdc/ac]	30/120
Max. output current	[mA]	100
Encoder type		hall effect
Encoder input voltage	[Vdc]	4 - 24
Encoder output voltage levels low (logical zero), typical / max.	[Vdc]	 0.1 / 0.25
Encoder resolution HDxx-B017 HDxx-B026 HDxx-B045 HDxx-B068 HDxx-B100 HDxx-B160	[mm/pulse]	 0.28 0.15 0.09 0.07 0.04 0.03

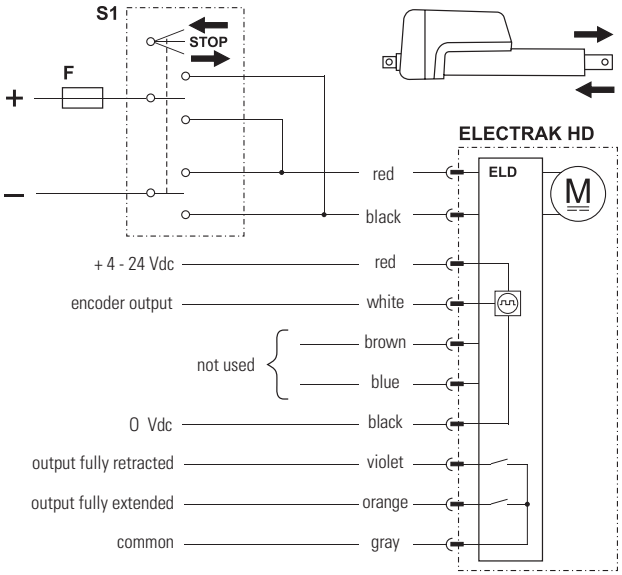

F Fuse
S1 Double pole double throw switch

Control option ELD works as option EXD but also has two outputs that indicate when the extension tube is in its fully extended or retracted position.

Electrak® HD – Electrical Connections

Option Type LXX

Actuator supply voltage HD12 HD24 HD48	[Vdc]	 9 - 16 18 - 32 36 - 64
Extend / retract input voltage HD12(24) HD48	[Vdc]	 9 - 32 12 - 64
Extend / retract input current	[mA]	6 - 22

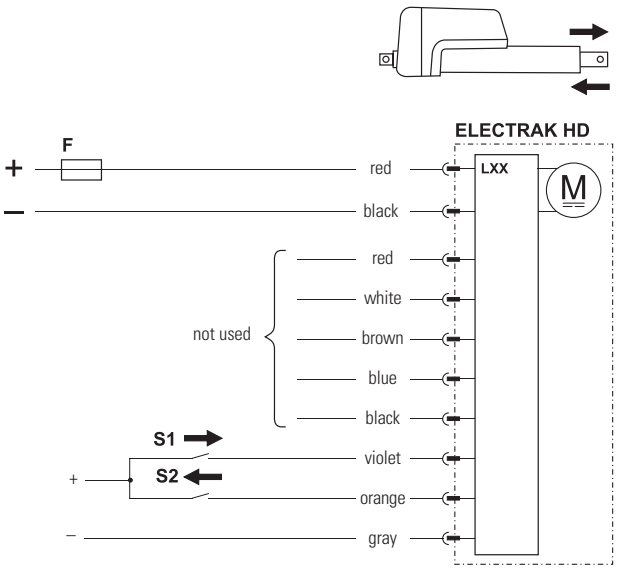

F Fuse
S1 Extend switch
S2 Retract switch

Control option LXX has all the basic Electrak Monitoring Package features included in control option EXX, but the polarity of the motor voltage is switched by the onboard electronics instead. The customer-supplied switches used to command the actuator to extend or retract only need to handle low-level signals. However, the power supply and wiring that supply the actuator must be able to handle the motor current for the actuator model and load being used, as well as the inrush current (up to one and a half times the max. continuous current for the max. load being used for up to 150 milliseconds).

Option Type LLX

Actuator supply voltage HD12 HD24 HD48	[Vdc]	 9 - 16 18 - 32 36 - 64
Output contact type		potential free
Max. output voltage	[Vdc/ac]	30/120
Max. output current	[mA]	100
Extend / retract input voltage HD12(24) HD48	[Vdc]	 9 - 32 12 - 64
Extend / retract input current	[mA]	6 - 22

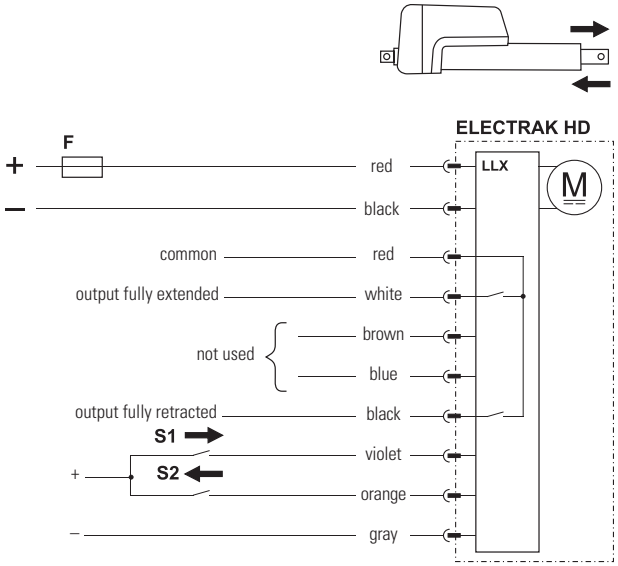

F Fuse
S1 Extend switch
S2 Retract switch

Control option LLX works as option LXX but also has two outputs that indicate when the extension tube is in its fully extended or retracted position.

Option Type LXP

Actuator supply voltage HD12 HD24 HD48	[Vdc]	 9 - 16 18 - 32 36 - 64
Potentiometer type		wire-wound
Potentiometer max. input voltage	[Vdc]	32
Potentiometer max. power	[W]	1
Potentiometer linearity	[%]	± 0.25
Potentiometer output resolution 50 - 100 mm stroke 150 - 250 mm stroke 300 - 500 mm stroke 550 - 1000 mm stroke	[ohm/mm]	 65.6 32.8 19.7 9.8
Extend / retract input voltage HD12(24) HD48	[Vdc]	 9 - 32 12 - 64
Extend / retract input current	[mA]	6 - 22

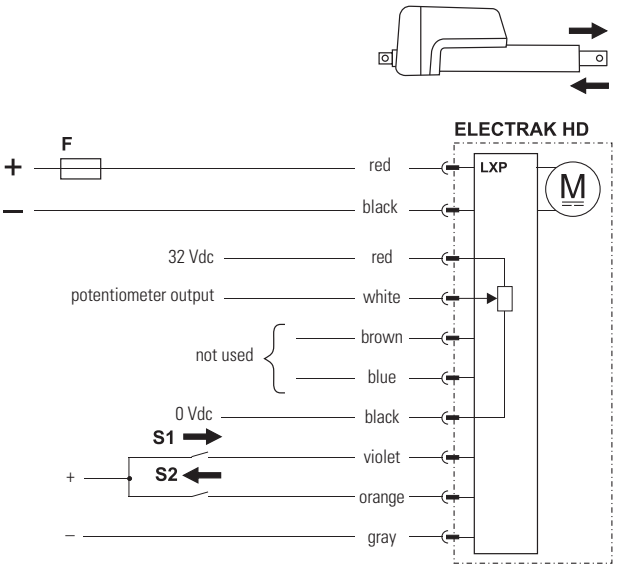

F Fuse
S1 Extend switch
S2 Retract switch

Control option LXP works as option LXX but also has an analog (potentiometer) output that will provide feedback on the extension tube position.

Option Type LPS

Actuator supply voltage HD12 HD24 HD48	[Vdc]	 9 - 16 18 - 32 -
Signal-follower input voltage	[Vdc]	0.5 - 4.5
Signal-follower max. current	[A]	0.8
Signal-follower movement	[mm/Vdc]	stroke* [mm] / 4
Signal-follower repeatability	[± mm]	0.1
Programming inputs voltage HD12(24) HD48	[Vdc]	 9 - 32 -
Extend / retract input voltage HD12(24) HD48	[Vdc]	 9 - 32 -
Extend / retract input current	[mA]	6 - 22

* ordering stroke of the actuator or the stroke between any set programmable extend or retract limits.

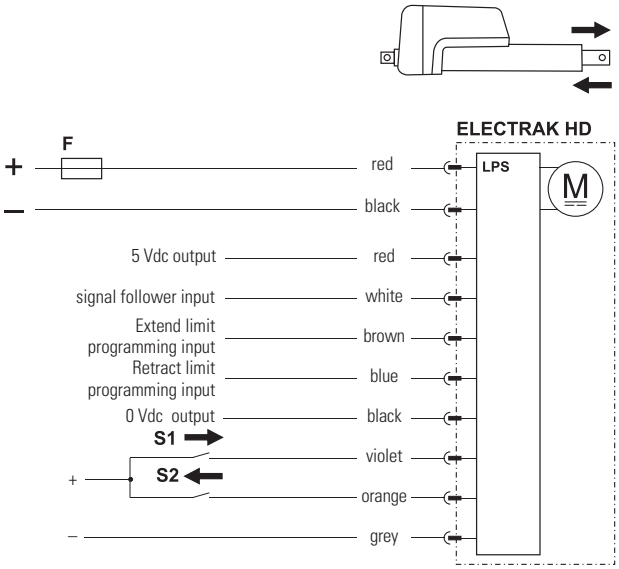

F Fuse
S1 Extend switch
S2 Retract switch

Control option LPS works as option LXX but also has programmable mid-stroke software extend and retract limits as well as a signal-follower input that allows the extension tube position to be controlled from a potentiometer or other voltage control. Both functions can be used at the same time.

Electrak® HD – Electrical Connections

Option Type SY2		
Actuator supply voltage	[Vdc]	
HD12		9 - 16
HD24		18 - 32
HD48		36 - 64
Actuator current draw	[A]	see page 19
Extend / retract input voltage	[Vdc]	
HD12(24)		9 - 32
HD48		12 - 64
Extend / retract input current	[mA]	6 - 22
Number of synchronized actuators		2 - 8
Max. actuator speed difference	[%]	25
Hold and wait distance	[mm]	
HDxx-B017		25.0
HDxx-B026		15.0
HDxx-B045		10.0
HDxx-B068		7.5
HDxx-B100		5.0
HDxx-B160		2.5

Control option SY2 works as option LXX but also has a synchronization feature, allowing up to eight actuators having the SY2 option to run in integrated motion. When using the low-level extend and retract inputs on the master actuator, the receiver(s) will follow. If there is a need to run an actuator individually, it is possible to put it into an override state by closing a switch (S3) connected to the red lead as shown in the wiring diagram.

F Fuses
S1 Extend switch
S2 Retract switch
S3 Override/reset switch
R Resistors 120 Ohm

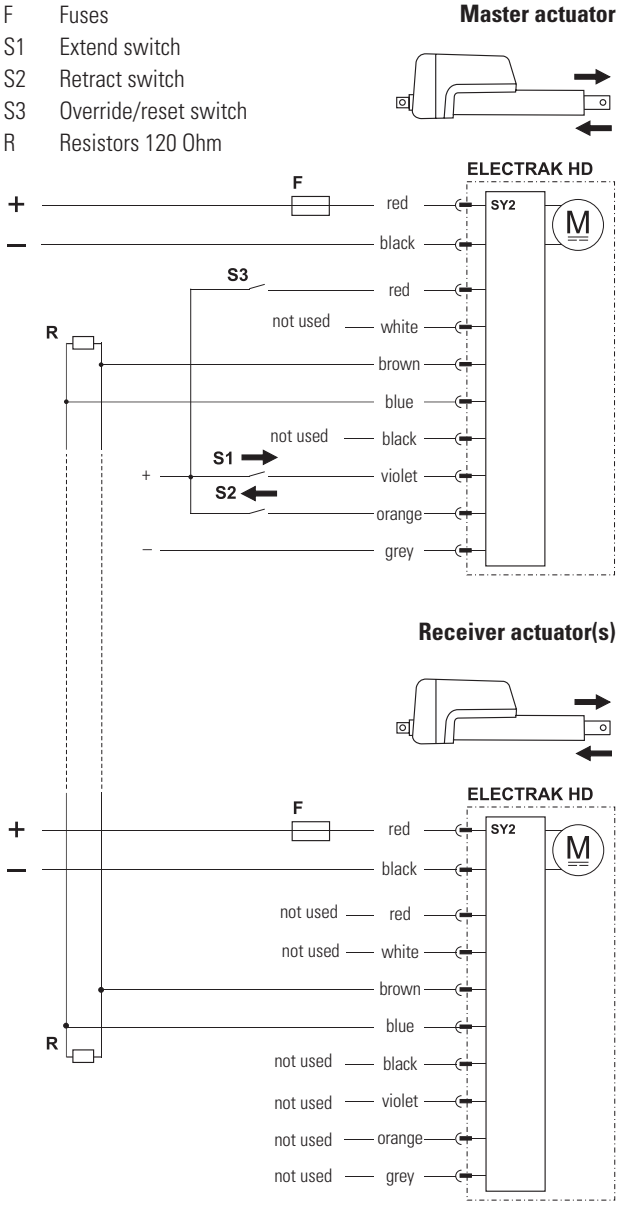

Important Design Notes

- All actuators' supply voltages must be within ±10% of each other.
- While uneven loads can be supported, it is suggested that loads be distributed as evenly as possibly to avoid overloading a single actuator within the system.
- The speed of the actuators will typically remain close to the speed they are rated for at full load, even if running at a lower load.
- If a unit detects that it is 1 mm further ahead of any other in the network, it will reduce its speed slightly to allow the other to catch up. If the positional difference between an actuator and the rearmost actuator exceeds the hold and wait distance specified in the table above, the unit will stop until the rearmost actuator catches up.
- If one actuator encounters an overload condition or detects that the measured position isn't updating while running the motor, it will trip the overload protection and send a signal to each actuator on the network to stop. The units can be immediately reversed (unless they bind up the system), or they can continue in the same direction after a power reset.
- Each actuator tracks the total number of actuators that are connected to the system. No synchronous motion will be allowed if any actuator detects that fewer than the minimum number of required actuators are connected. This allows the whole system to stop if the power or communication is lost to any actuator in the system.
- Activating the override/reset signal on any of the actuators will reset the minimum number of required actuators that must be connected to the system to 0. If more actuators are connected at any point, the minimum number of required actuators will be updated to the number of actuators that are currently connected.
- In order to give the master and receiver(s) enough time to communicate, a 250 ms delay will be enforced following any motion and before any subsequent motion is allowed.

Option Type CNO and COO

Actuator supply voltage [Vdc] HD12 HD24 HD48	 9 - 16 18 - 32 36 - 64
Command data includes: • position • speed • current	
Feedback data includes: • position • speed • current • other diagnostic information	
Extend / retract input voltage [Vdc] HD12(24) HD48	 9 - 32 12 - 64
Extend / retract input current [mA]	6 - 22

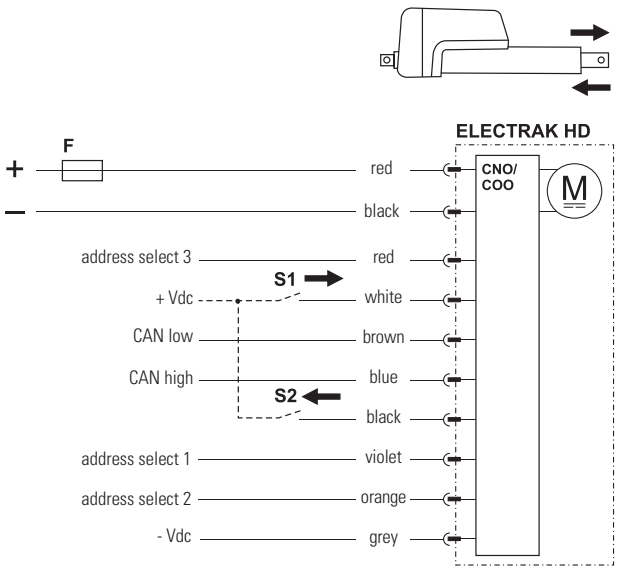

F Fuse
S1 Manual extension switch (optional)
S2 Manual retraction switch (optional)

Control option CNO has a SAE J1939 CAN bus control interface, COO has a CANopen control interface that control and monitor the actuator. Extend and retract commands are sent via CAN messages on the CAN low and CAN high pins. Address select 1, 2 and 3 pins can be used as a binary encoded decimal (BCD) adder to the default address. This can be used when multiple CAN bus actuators are located on a single bus. The actuator can be manually forced to extend or retract by using the inputs on white and black wires. When the manual control inputs are used, CAN bus control messages are ignored, but the unit will still provide CAN bus feedback messages. When the inputs are left floating, CAN bus functionality for control messages is restored.

Electrak® HD – Accessories

Rod End Front Adapter

Type	metric	inch
Material	Cadmium-plated steel	
Dimensions A B C	 12.0 ± 0.1 mm 16.0 ± 0.1 mm M12	 0.5 in 0.625 in 1/2-20 UNF
p/n	756-9021	756-9007

Dimensions

Dimensions
mm (in)

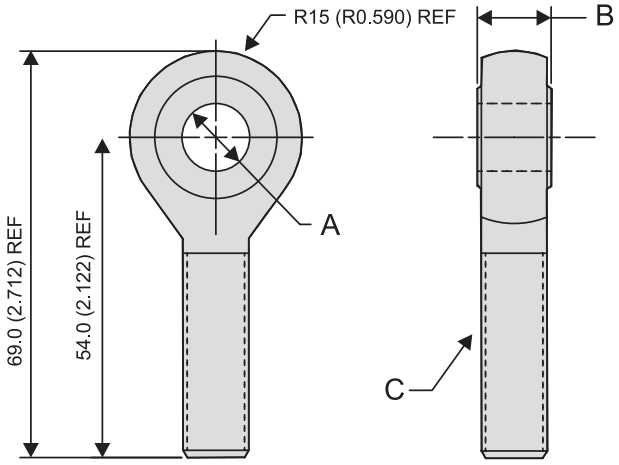

The rod end front adapter comes in one metric and one imperial version. The metric adapter can be mounted to the front of the extension tube if the actuator is equipped with the metric female thread front adapter option (type P), while the inch adapter requires the inch female thread option (type G).

Wire Harness Kits

Part Number	Description
954-9364	0.3 m Power Only (EXX)
954-9365	1.5 m Power Only (EXX)
954-9366	5.0 m Power Only (EXX)
954-9367	0.3 m Power and 8-Wire Signal (ELX, ELP, ELD, LXX, LLX, LXP, CNO, COO, SYN)
954-9368	1.5 m Power and 8-Wire Signal (ELX, ELP, ELD, LXX, LLX, LXP, CNO, COO, SYN)
954-9369	5.0 m Power and 8-Wire Signal (ELX, ELP, ELD, LXX, LLX, LXP, CNO, COO, SYN)
954-9370	0.3 m Power and 3-Wire Signal (EXP, EXD)
954-9471	1.5 m Power and 3-Wire Signal (EXP, EXD)
954-9372	5.0 m Power and 3-Wire Signal (EXP, EXD)

Limit Switches for Cover Tube Mounting

Sensor type		solid state	reed switch
Contact type		normally open (N.O.)	
Output type		PNP	contact
Voltage	[VDC/AC]	10 - 30 / –	5 -115 / 5 -115
Max. current	[mA]	100	
Hysteresis	[mm (in)]	1.5 (0.06)	1.0 (0.04)
Operating temperature	[°C]	- 20 to + 70	- 20 to + 70
Lead cross section	[mm²]	3 × 0.14	2 × 0.14
Length (L)	[mm (in)]	25.3 (1.0)	30.5 (1.2)
Protection class		IP69K	IP67
LED indicator		yes	
Connection		2 m cable with flying leads	
p/n		840-9131	840-9132

Mounting positions

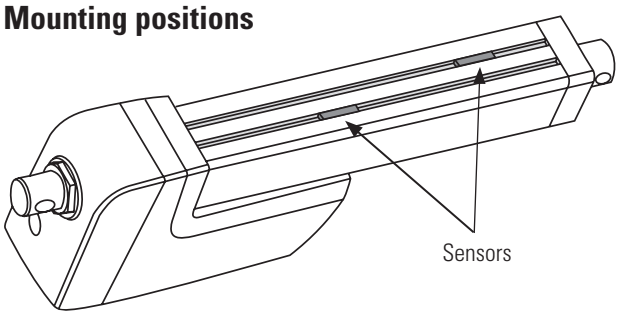

Dimensions

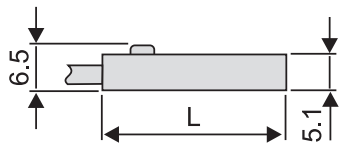

Dimensions
mm

Connection

Solid state

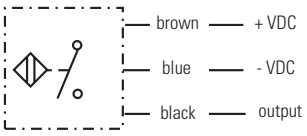

Reed switch

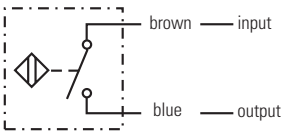

The limit switches are mounted in the cover tube slots and will be switched by a magnet mounted inside of the actuator on the extension tube.

Electrak® LL – Technical Features

SMART

Standard Features

- Long life expectancy
- High duty cycle
- Constant speed regardless of the load
- Designed and tested to meet the toughest environmental demands
- 24 Vdc versions complies to railway standards EN 50155, EN 60077 and EN 45545 *
- Onboard electronics eliminate the need for standalone controls
- Suitable for pneumatic and hydraulic-to-electric application conversions

* Electrak LL (24 Vdc version only) complies to the railway standards EN 50155, EN 60077 and EN 4554.

General Specifications

Screw type	ball
Nut type	load lock ball nut
Manual override	yes
Anti-rotation	yes
Controlled braking	yes (1)
Static load holding brake	yes
Safety features	Electrak monitoring package: current monitoring voltage monitoring temperature monitoring internal end-of-stroke limit switches
Electrical connections (2)	cable(s) with flying leads
Compliances (3)	CE, UKCA, RoHS, EN 50155, EN 60077, EN 45545

(1) The actuator is stopped in a controlled manner using a preset deceleration rate.
(2) There are two cables. The cable(s) enters the actuator via a connector. The replacement of an actuator can be completed by unplugging the old actuator and plugging in the new one.
(3) Only the 24 Vdc versions complies to EN 50155, EN 60077 and EN 45545.

Optional Mechanical Features

Variety of front and rear adapters
Alternative adapter orientation

Optional Electronic Control Features

CANopen® CAN bus
SAE J1939 CAN bus
Low-level switching
Programmable limit switches
End-of-stroke limit switch inputs
Absolute position output

Control Option Combinations

LEX	Electrak Monitoring Package + low-level signal motor switching + external end-off-stroke limit switch inputs
LXX	Electrak Monitoring Package + low-level signal motor switching
LXP	Electrak Monitoring Package + low-level signal motor switching + absolute position feedback output
CNO	SAE J1939 CAN bus + speed control
COO	CANopen CAN bus + speed control

Accessories

Mechanical	Rod end front adapter
Electrical	External slot-mounted limit switches

Electrak LL – Technical Specifications

Mechanical Specifications

Max. static load [1]	[kN (lbs)]	
LLxx-B020		5 (1124)
LLxx-B040		10 (2248)
LLxx-B060		15 (3372)
Max. dynamic load (Fx)	[kN (lbs)]	
LLxx-B020		2 (450)
LLxx-B040		4 (899)
LLxx-B060		6 (1349)
Speed [2]	[mm/s (in/s)]	
LLxx-B020		54 (2.13)
LLxx-B040		30 (1.18)
LLxx-B060		15 (0.59)
Min. ordering stroke (S) length	[mm]	100
Max. ordering stroke (S) length	[mm]	450
Ordering stroke length increments	[mm]	50
Operating temperature limits	[°C (F)]	- 40 – 85 (- 40 – 185)
Full load duty cycle @ 25 °C (77 °F)	[%]	35
End play, maximum	[mm (in)]	1.2 (0.047)
Restraining torque	[Nm (lbs)]	0
Protection class - static		IP66 / IP69K
Protection class - dynamic		IP66
Salt spray resistance	[h]	500

1) Max. static load at fully retracted stroke
2) Speeds are constant regardless of the load unless using the speed control feature in bus controlled units
3) Do not use PWM voltage for speed control to avoid damaging the onboard electronics
4) Control option LEX not available with 48 Vdc input voltage

Weight [kg]

Ordering Stroke (S) [mm]							
100	150	200	250	300	350	400	450
6.8	7.2	7.5	7.9	8.2	8.6	8.9	9.3

Conversion Factors:
Millimeter to inch: 1 mm = 0.03937 in
Kilogram to pound: 1 kg = 2.204623 lbs

Electrical Specifications

Available input voltages [3] [4]	[Vdc]	24, 48
Input voltage tolerance	[Vdc]	
LL24 (24 Vdc input voltage)		16.8 - 32.0
LL48 (48 Vdc input voltage)		36.0 - 60.0
Current draw @ no load/max. load	[A]	
LL24-B020(40)		2/10.50
LL24-B060		2/8.50
LL48-B020(40)		1/5.25
LL48-B060		1/4.25
Motor cable leads cross section	[mm² (AWG)]	2 (14)
Signal cable leads cross section	[mm² (AWG)]	0.5 (20)
Standard cable length (Ca1)	[m (in)]	0.3 (11.8)
Cable diameter (Ca2)	[mm (in)]	
motor cable		7.3 (0.29)
signal cable		6.6 (0.26)
Flying lead length (Ca3)	[mm (in)]	74 (2.9)
Stripped lead length (Ca4)	[mm (in)]	6 (0.25)

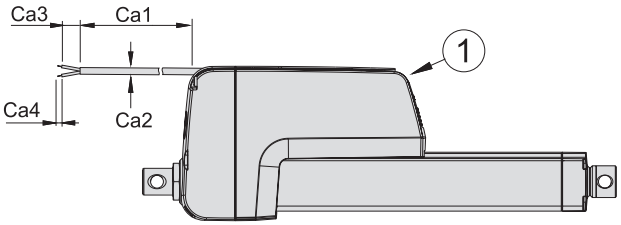

The drawing shows the cables exiting the cable slots at the end of the actuator housing, which is the shipping position. The user can adjust the exit point to be anywhere between the connector (1) in the front of the housing and the end of the cable slots.

Electrak® LL – Dimensions

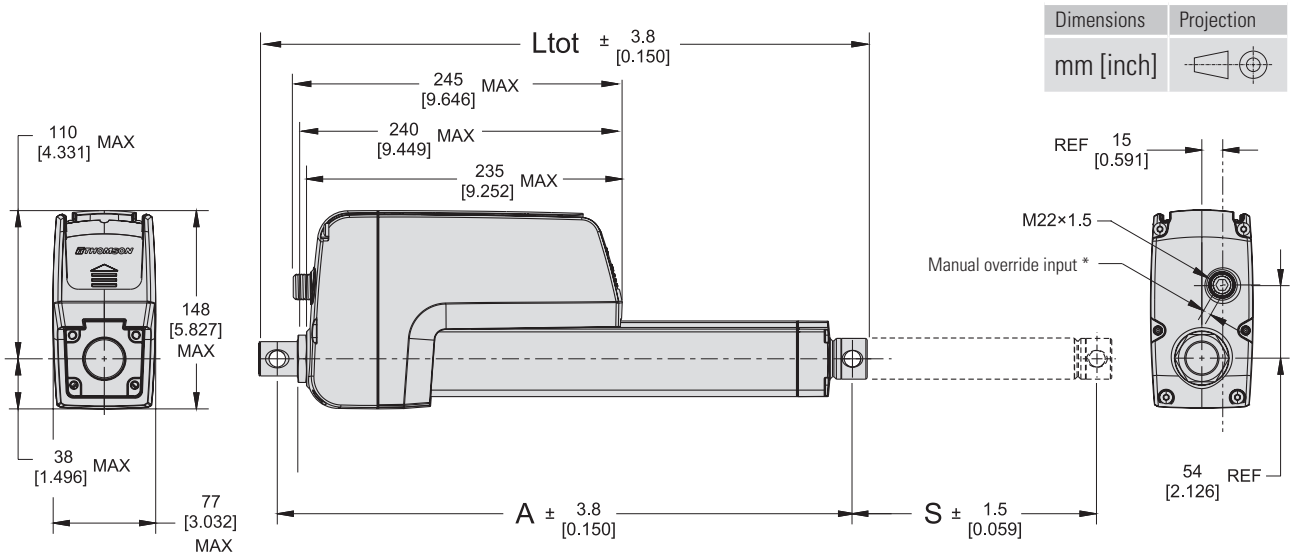

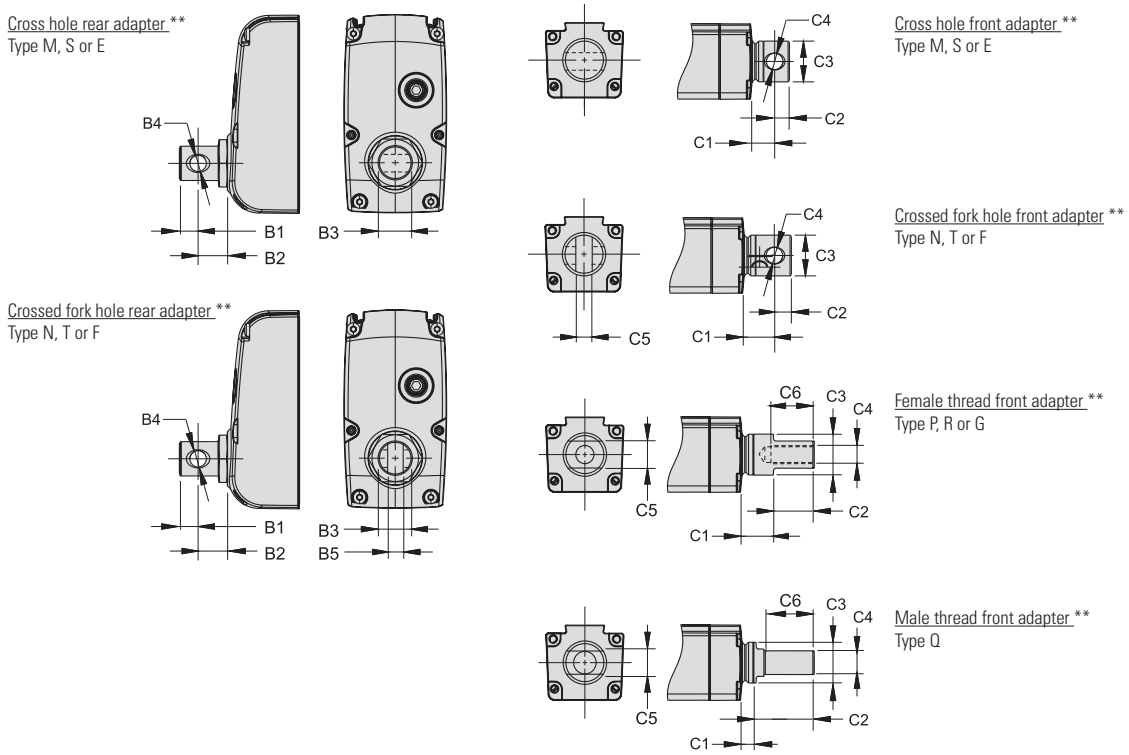

* Manual override input. The input hole is covered with a plastic plug. When removed, a 6 mm female hexagon key can be inserted and used as a crank.
** All adapters shown in the standard orientation.

Ordering Stroke, Retracted Length and Total Length Relationships [mm (in)]

Ordering Stroke (S)	Retracted Length (A)	Total Length (Ltot),
100 - 450 (3.937 - 17.716)	S + 182 (7.165) + B2 + C1	A + B1 + C2

Rear Adapter Dimensions [mm (in)]

	Adapter Type			
	M, S	E	N, T	F
B1	13.4 (0.53)			
B2	21.6 (0.85)			
B3	25.4 (1.0)			
B4	12.2 E9 (0.48)	12.8 (0.506)	12.2 E9 (0.48)	12.8 (0.506)
B5	-	-	8.2 (0.323)	

Front Adapter Dimensions [mm (in)]

	Adapter Type						
	M, S	E	N, T	F	P, R	G	Q
C1	24.0 (0.945)		27.0 (1.063)		24.9 (0.980)		13.2 (0.519)
C2	10.9 (0.429)		12.9 (0.508)		30 (1.18)		42 (1.654)
C3	34.93 (1.375)						
C4	12.2 E9 (0.48)	12.8 (0.506)	12.2 E9 (0.48)	12.8 (0.506)	M12 × 1.75	1/2-20 NF-2B	M16 × 2
C5	-	-	8.2 (0.323)		19 (0.748)		
C6	-	-	-	-	35 (1.38)		

Electrak® LL – Performance Diagrams

Screw Type and Dynamic Load Capacity

ball screw, 2 kN (450 lbs) ball screw, 4 kN (899 lbs) ball screw, 6 kN (1348 lbs)

Load vs. Speed

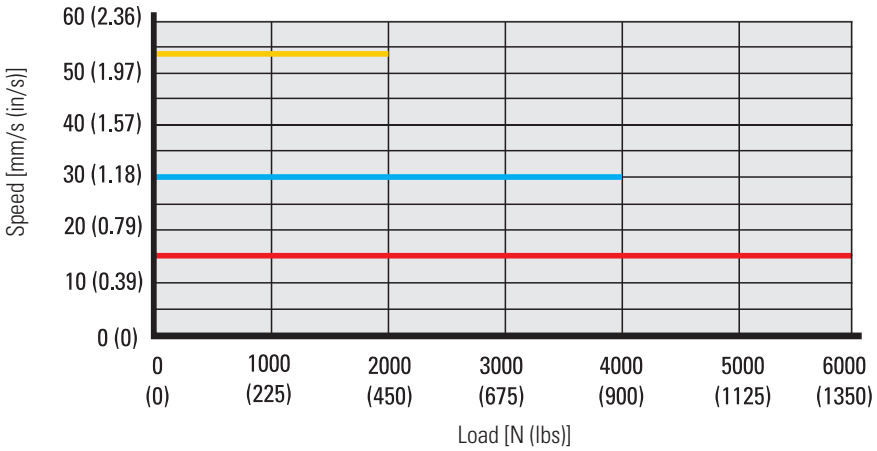

Load vs. Current [1]

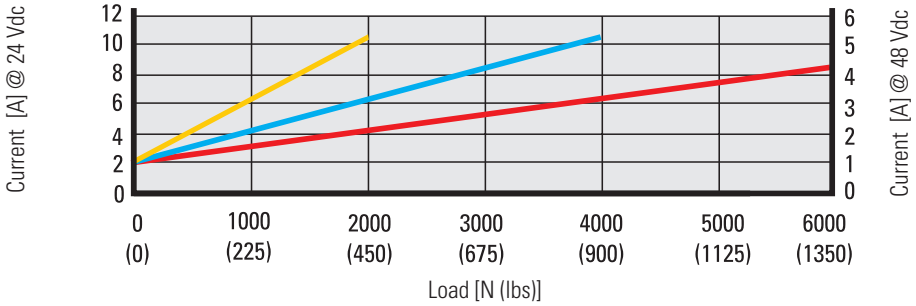

Load vs. Travel Life Distance [2]

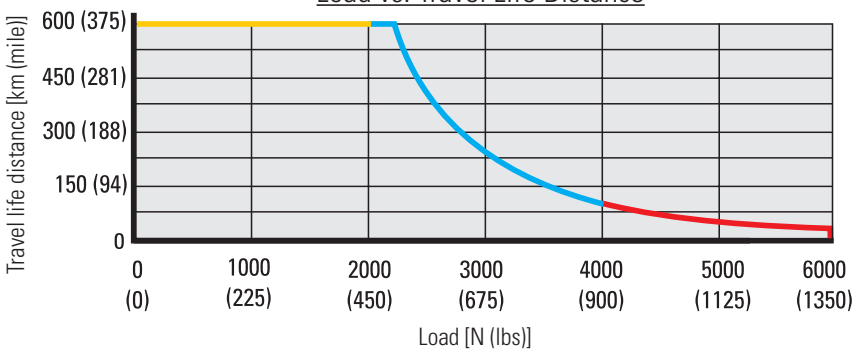

Load vs. Duty Cycle [1] [3]

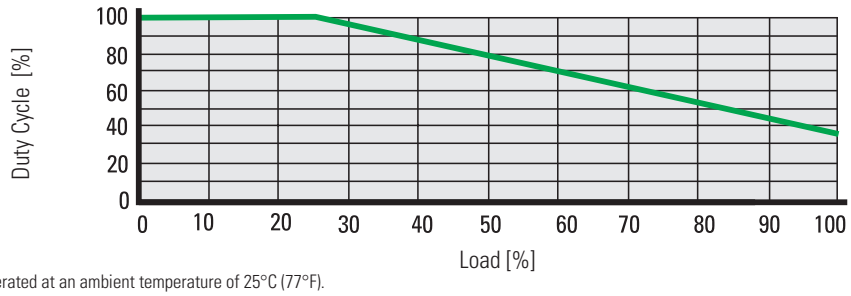

1) Curves were generated at an ambient temperature of 25°C (77°F).
2) The exact travel life also depends on temperature and other environmental factors. Contact customer support for more information.
3) Load in percent of the max permissible load for the screw type and dynamic load capacity in question.

Electrak LL – Ordering Key

Ordering Key

1	2	3	4	5	6	7	8	9
LL24	**B040-**	**0200**	**LEX**	**A**	**S**	**S**	**S**	**D**

1. Model and input voltage
LL24 = Electrak LL, 24 Vdc
LL48 = Electrak LL, 48 Vdc

2. Screw type, dynamic load capacity
B020- = ball screw, 2 kN (450 lbs)
B040- = ball screw, 4 kN (899 lbs)
B060- = ball screw, 6 kN (1348 lbs)

3. Ordering stroke length (1)
0100 = 100 mm
0150 = 150 mm
0200 = 200 mm
0250 = 250 mm
0300 = 300 mm
0350 = 350 mm
0400 = 400 mm
0450 = 450 mm

4. Control option
LEX = Electrak Monitoring Package + low-level signal motor switching + external end-off-stroke limit switch inputs (2)
LXX = Electrak Monitoring Package + low-level signal motor switching (3)
LXP = LXX + absolute position feedback output (3)
CNO = SAE J1939 CAN bus + speed control (3)
COO = CANopen CAN bus + speed control (3)

5. Harness option
A = 0.3 m long cables with flying leads (number coded leads)
1 = 0.3 m long halogen-free cables with flying leads (color coded leads)
2 = 1.5 m long halogen-free cables with flying leads (color coded leads)
3 = 5.0 m long halogen-free cables with flying leads (color coded leads)

6. Rear adapter option
M = cross hole for 12 mm pin
E = cross hole for 0.5 inch pin
N = forked cross hole for 12 mm pin
F = forked cross hole for 0.5 inch pin
S = stainless cross hole for 12 mm pin
T = stainless forked cross hole for 12 mm pin

7. Front adapter option
M = cross hole for 12 mm pin
E = cross hole for 0.5 inch pin
N = forked cross hole for 12 mm pin
F = forked cross hole for 0.5 inch pin
P = metric female thread M12 × 1.75
G = inch female thread 1/2-20 UNF-2B
S = stainless cross hole for 12 mm pin
Q = stainless metric male thread M16 × 2
R = stainless metric female thread M16 × 2
T = stainless forked cross hole for 12 mm pin

8. Adapter orientation
S = standard
M = 90° turned

9. Connector option
D = flying leads

(1) Other stroke lengths available upon request. Please contact customer support.
(2) Only availabe with 24 Vdc input voltage.
(3) Available for both 24 and 48 Vdc input voltages.

Electrak® LL – Electrical Connections

Control Option LEX

Available input voltages	[Vdc]	24
Input voltage tolerance	[Vdc]	16.8 - 32.0
Extend / retract input voltage	[Vdc]	9 - 64
Extend / retract input current	[mA]	0.35 - 2.75

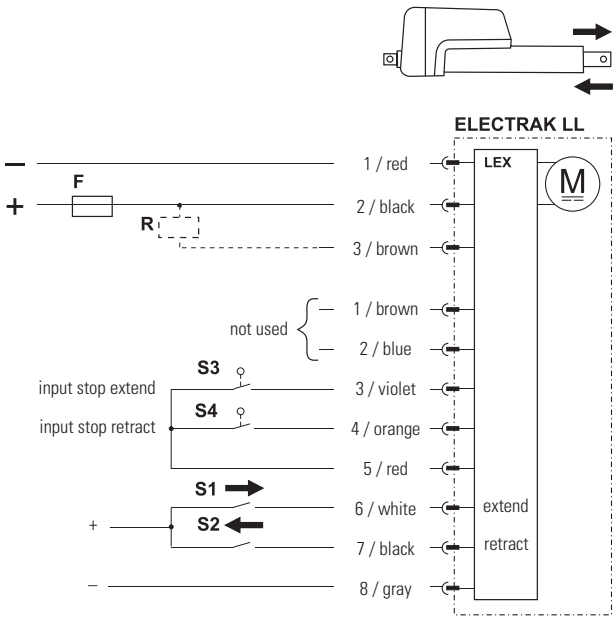

+ / - Positive / negative voltage
F Fuse
R Brake resistor
S1 Switch extend
S2 Switch retract
S3 Limit switch stop extend
S4 Limit switch stop retract

The actuator movement is controlled by connecting a positive voltage to the extend or retract input, and a negative to the common input on lead 8 / gray. There are also external limit switch inputs that stop the actuator from extending or retracting when activated. If you want to detect the position of the extension tube, we recommend using a Thomson reed sensor (part number 840-9132) that mounts directly to the extension tube sensor grooves.

Control Option LXX / LXP

Available input voltages	[Vdc]	24, 48
Input voltage tolerance LL24 (24 Vdc input voltage) LL48 (48 Vdc input voltage)	[Vdc]	 16.8 - 32.0 36.0 - 60.0
Extend / retract input voltage	[Vdc]	9 - 64
Extend / retract input current	[mA]	0.35 - 2.75
Position feedback output voltage	[Vdc]	0.5 - 4.5
Position feedback linearity	[%]	± 0.25
Position feedback resolution	[mm/V]	ordering stroke length (S) [mm] / 4

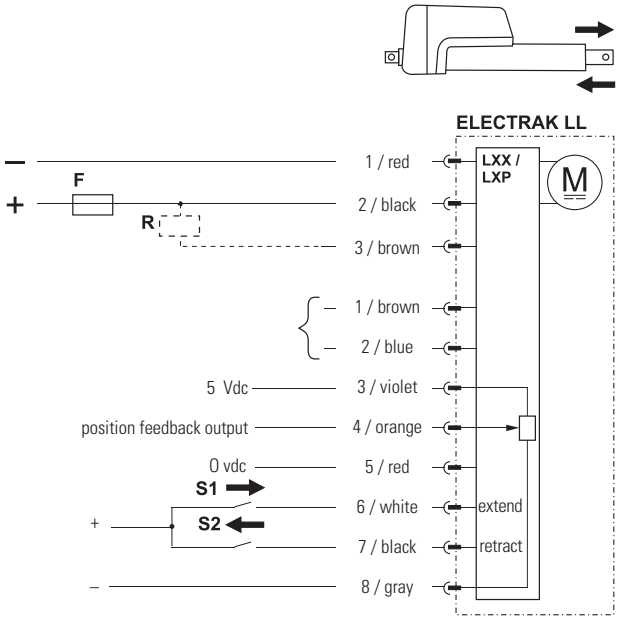

+ / - Positive / negative voltage
F Fuse
R Brake resistor
S1 Switch extend
S2 Switch retract

On control options LXX and LXP, the actuator movement is controlled by connecting the input voltage positive to the extend or retract input, and the negative to the common input on lead 8 / gray. On the LXP option, there is also an absolute position feedback output.

Control Option Type CNO / COO

Available input voltages	[Vdc]	24, 48
Input voltage tolerance LL24 (24 Vdc input voltage) LL48 (48 Vdc input voltage)	[Vdc]	 16.8 - 32.0 36.0 - 60.0
Extend / retract input voltage	[Vdc]	9 - 64
Extend / retract input current	[mA]	0.35 - 2.75
CAN bus command data includes: • position • speed • current		
CAN bus feedback data includes: • position • speed • current • other diagnostic information		

Control option CNO includes a SAE J1939 CAN bus control interface, and COO includes a CANopen® control interface that controls and monitors the actuator. Movement commands are sent via CAN messages on the CAN low and CAN high inputs. Address inputs AS1, AS2 and AS3J can be used as a binary coded decimal (BCD) adder to change the default address of the actuator. This option can be used when multiple CAN bus actuators are located on a single bus. The actuator can be manually forced to move by connecting a positive voltage to the extend or retract input, and a negative to the common input. When these manual control inputs are used, CAN bus control messages are ignored, but the unit will still provide CAN bus feedback messages. When the inputs are left floating, CAN bus functionality for control messages is restored. When using the address inputs and/or the manual extend and retract switches, the common input on lead 8 / gray must be connected to negative.

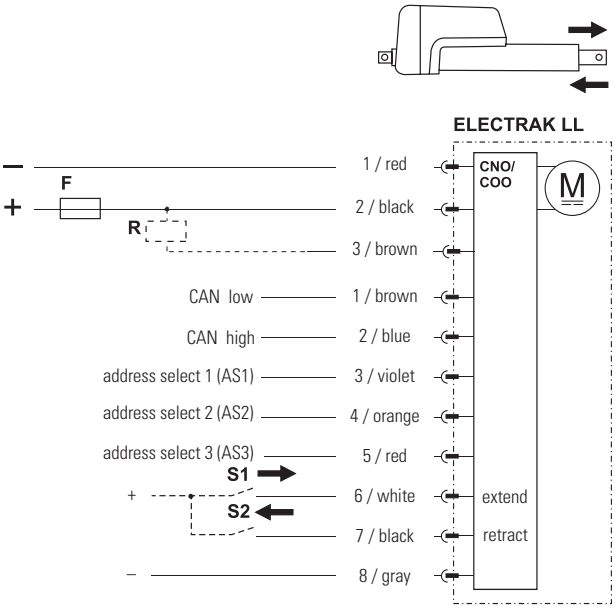

+ / - Positive / negative voltage
R Brake resistor
F Fuse
S1 Switch extend (optional)
S2 Switch retract (optional)
AS1 Address selection switch for binary position 1
AS2 Address selection switch for binary position 2
AS3 Address selection switch for binary position 3

Electrak® LL – Accessories

Limit Switches for Cover Tube Mounting

Sensor type		solid state	reed switch
Contact type		normally open (N.O.)	
Output type		PNP	contact
Voltage	[Vdc/Vac]	10 - 30 / –	5 -120 / 5 -120
Max. current	[mA]	100	
Hysteresis	[mm]	1.5	1.0
Operating temperature	[°C]	- 20 to + 70	- 20 to + 70
Lead cross section	[mm²]	3 × 0.14	2 × 0.14
Length (L)	[mm]	25.3	30.5
Height (H)	[mm]	5.1	5.7
Protection class		IP69K	IP67
LED indicator		yes	
Connection		2 m cable with flying leads	
p/n		840-9131	840-9132

Mounting positions

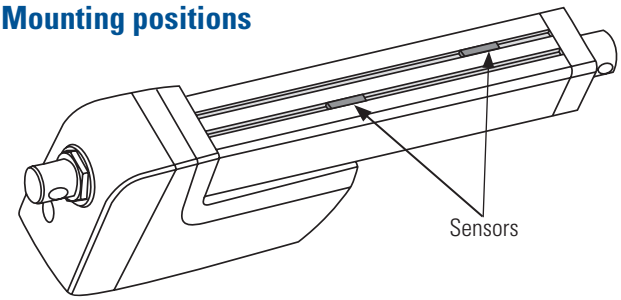

Dimensions [mm]

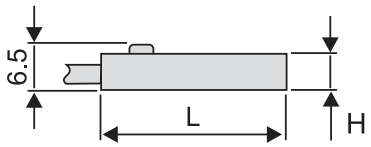

Connection

Solid state

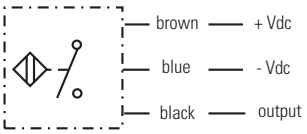

Reed switch

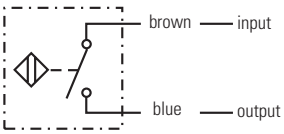

The limit switches are mounted in the cover tube slots and will be switched by a magnet mounted inside of the actuator on the extension tube.

Rod End Front Adapter

Type	metric	inch
Material	Cadmium-plated steel	
Dimensions A B C	 12.0 ± 0.1 mm 14.3 ± 0.1 mm M12	 0.5 in 0.625 in 1/2-20 UNF
p/n	756-9021	756-9007

Dimensions [mm (in)]

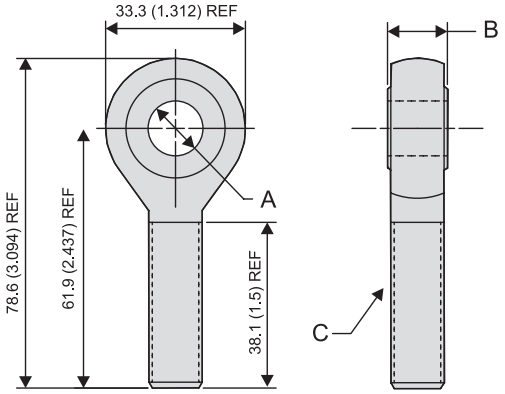

The rod end front adapter comes in a metric or inch version. The metric adapter can be mounted to the front of the extension tube if the actuator is equipped with the metric female thread front adapter option (type P), while the inch adapter requires the inch female thread option (type G).

Notes

Electrak® MD – Technical Features

SMART

General Specifications

Screw type	acme
Nut type	lead
Manual override	no
Anti-rotation	yes
Static load holding brake	no (self-locking)
Electrical connections	cable with flying leads
Compliance	CE, UKCA, RoHS, REACH, ISO 13766

Standard Features

- Best-in-class power density
- Onboard electronics, including versions with SAE J1939 CAN bus or CANopen CAN bus
- Suitable for pneumatic and hydraulic-to-electric application conversions
- Designed and tested to meet the toughest environmental demands
- Reliable and maintenance free

Optional Features

Mechanical options	Multiple cable length options
	Alternative adapter orientation
Control options	End-of-stroke limit switches
	Analog position feedback
	Low-level signal motor switching
	JSAE 1939 CAN bus
	CANopen CAN bus

Control Options Features

	Control Option							
Feature	XXX	XXP	EXX	EXP	LXX	LXP	CNO	COO
Dynamic braking	no	no	yes	yes	yes	yes	yes	yes
End-of-stroke protection	yes	yes	yes	yes	yes	yes	yes	yes
Overload protection	no	no	yes	yes	yes	yes	yes	yes
Temperature monitoring	no	no	yes	yes	yes	yes	yes	yes
Temperature compensation	no	no	yes	yes	yes	yes	no	no
Voltage monitoring	no	no	yes	yes	yes	yes	yes	yes
PWM voltage compatible	yes	yes	no	no	no	no	no	no

Electrak MD – Technical Specifications

Mechanical Specifications

Max. static and dynamic load (Fx)	[N (lbs)	
MDxxA025		250 (56)
MDxxA050		500 (112)
MDxxA100		1000 (225)
MDxxA200		2000 (450)
Speed @ no load/max. load	[mm/s (in/s)]	
MDxxA025		52/43.8 (2.04/1.72)
MDxxA050		28/18.5 (1.1/0.73)
MDxxA100		14.5/11 (0.57/0.43)
MDxxA200		7/5.4 (0.28/0.21)
Min. ordering stroke (S) length	[mm]	50
Max. ordering stroke (S) length	[mm]	300
Ordering stroke length increments	[mm]	50
Operating temperature limits	[°C (F)]	- 40 – 85 (- 40 – 185)
Full load duty cycle @ 25 °C (77 °F)	[%]	25
End play, maximum	[mm (in)]	1.2 (0.047)
Restraining torque	[Nm (lbs)]	0
Protection class - static		IP67/IP69K
Protection class - dynamic		IP66
Salt spray resistance	[h]	500

Electrical Specifications

Available input voltages	[Vdc]	12, 24, 48
Input voltage tolerance	[Vdc]	
MD12 (12 Vdc input voltage)		9 - 16
MD24 (24 Vdc input voltage)		18 - 32
MD48 (48 Vdc input voltage)		36 - 60
Current draw @ no load/max. load	[A]	
MD12A025		1.2/5.2
MD24A025		0.6/2.6
MD48A025		0.3/1.3
MD12A050		1.4/6.2
MD24A050		0.7/3.1
MD48A050		0.4/1.6
MD12A100		1.2/5.2
MD24A100		0.6/2.6
MD48A100		0.3/1.3
MD12A200		1.4/6.2
MD24A200		0.7/3.1
MD48A200		0.4/1.6
Motor leads cross section	[mm^2 (AWG)]	0.75 (18)
Signal leads cross section	[mm^2 (AWG)]	0.35 (22)
Cable lengths, standard	[mm (in)]	300 (11.81) or 1000 (39.37)
Cable diameter	[mm (in)]	7.5 (0.3)

Actuator Weight [kg (lb)]

Ordering Stroke (S) [mm]					
50	100	150	200	250	300
1.1 (2.4)	1.2 (2.6)	1.3 (2.8)	1.4 (3.1)	1.5 (3.3)	1.6 (3.5)

Electrak® MD – Ordering Key

Ordering Key

1	2	3	4	5	6	7	8	9
MD12	**A025-**	**0300**	**XXX**	**2**	**N**	**N**	**S**	**D**

1. Model and input voltage
MD12 = Electrak MD, 12 Vdc
MD24 = Electrak MD, 24 Vdc
MD48 = Electrak MD, 48 Vdc

2. Screw type, dynamic load capacity
A025- = acme screw, 250 N (56 lbs)
A050- = acme screw, 500 N (112 lbs)
A100- = acme screw, 1000 N (225 lbs)
A200- = acme screw, 2000 N (450 lbs)

3. Ordering stroke length (1)
0050 = 50 mm
0100 = 100 mm
0150 = 150 mm
0200 = 200 mm
0250 = 250 mm
0300 = 300 mm

4. Electrak Modular Control System options
XXX = internal end-of-stroke limit switches
XXP = XXX + analog (potentiometer) position output
EXX = Electronic Monitoring Package (2)
EXP = EXX + analog (potentiometer) position output (2)
LXX = EXX + low-level signal motor switching
LLX = LXX + end-of-stroke indication outputs
LXP = LXX + analog (potentiometer) position output
LLP = LXP + end-of-stroke indication outputs
CNO = EXX + SAE J1939 CAN bus + open-loop speed control
COO = EXX + CANopen bus + open-loop speed control

5. Harness option
1 = 0.3 m long cable with flying leads
2 = 1 m long cable with flying leads

6. Rear adapter option
N = forked cross hole for 10 mm pin

7. Front adapter option
N = forked cross hole for 10 mm pin

8. Adapter orientation
S = standard
M = 90 ° turned

9. Connector option
D = flying leads

(1) Other stroke lengths available upon request. Please contact customer support.
(2) Option not available for models with 48 Vdc supply voltage.

Electrak MD – Dimensions

Dimensions	Projection
mm [inch]	

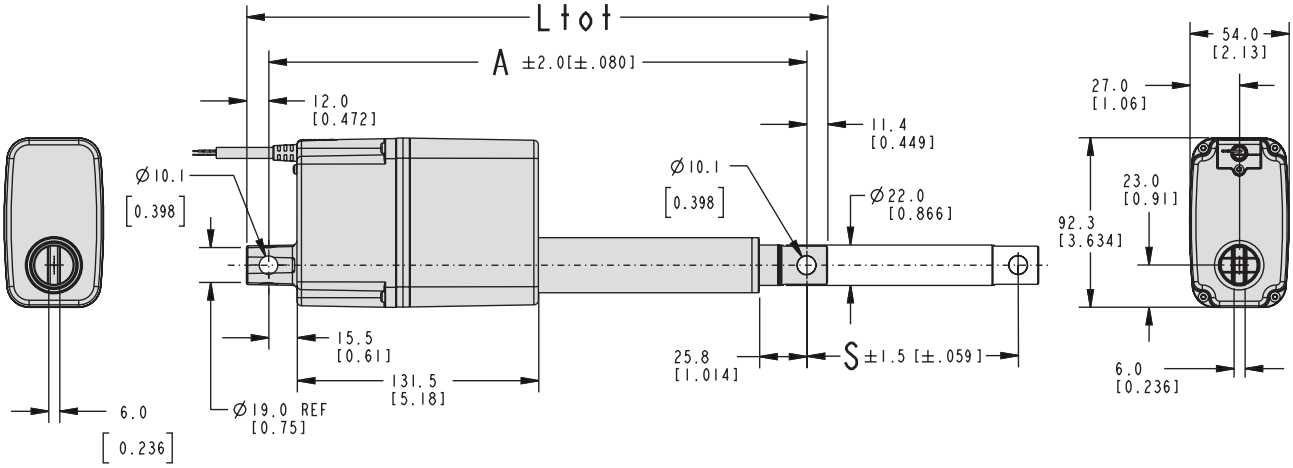

Note: All adapters shown in the standard orientation.

Ordering Stroke (S), Total Length (Ltot) and Retracted Length (A) Relationships

Standard Ordering Strokes (S)	[mm]	50, 100, 150, 200, 250, 300
Total Length (Ltot)	[mm]	Ltot = A + 23.4
Retracted Length (A)	[mm]	A = S + 133.2

Electrak® MD – Performance Diagrams

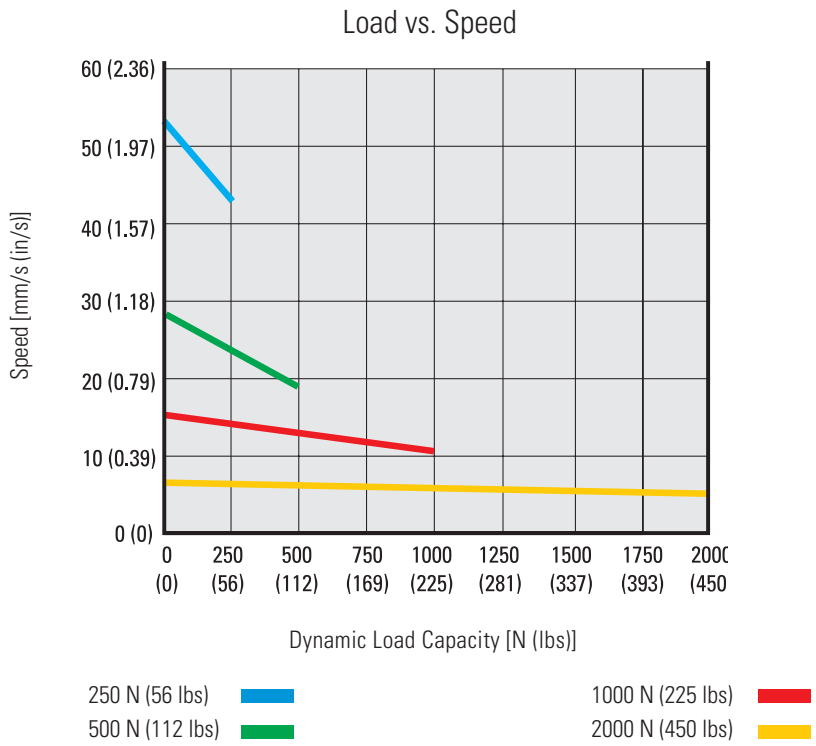

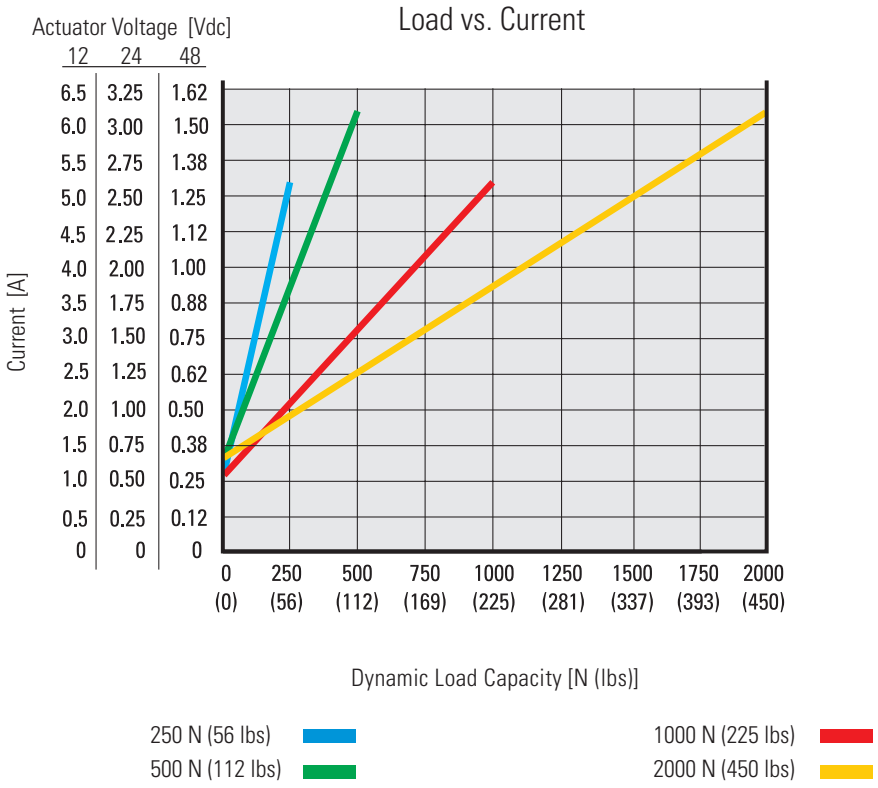

Note! Both curves were generated at an ambient temperature of 21°C (70°F). Different ambient temperature and individual actuator characteristics can produce slightly different values.

Electrak MD – Control Options

Control Option Type XXX

Actuator supply voltage	[Vdc]	
MD12		9 - 16
MD24		18 - 32
Actuator current draw	[A]	see page 110

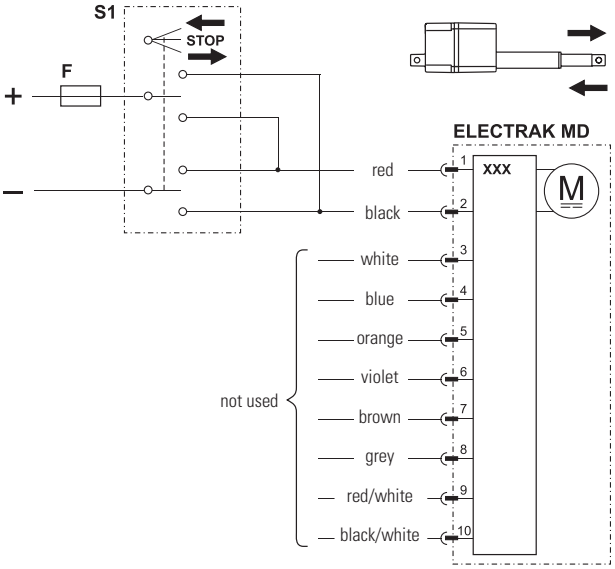

F Fuse
S1 Double pole double throw switch

With control option XXX, the polarity of the motor voltage is switched by a customer-supplied switch (switch, relay, etc.) to make the actuator extend or retract. The actuator will automatically stop when reaching the ends of stroke due to the built-in end- of-stroke limit switches. The switch, power supply, wiring and all other components must be able to handle the motor current for the actuator model and load being used, as well as the inrush current (up to three times the max. continuous current for the max. load being used for up to 150 milliseconds).

Control Option Type XXP

Actuator supply voltage	[Vdc]	
MD12		9 - 16
MD24		18 - 32
Actuator current draw	[A]	see page 110
Potentiometer type		wire-wound
Potentiometer max. input voltage	[Vdc]	32
Potentiometer max. power	[W]	1
Potentiometer linearity	[%]	± 0.25
Potentiometer output resolution	[ohm/mm]	
MDxxA025, all strokes		16.67
MDxxA100, all strokes		16.67
MDxxA050, 50 - 250 mm stroke		33.33
MDxxA200, 50 - 250 mm stroke		33.33
MDxxA050, 300 mm stroke		16.67
MDxxA200, 300 mm stroke		16.67

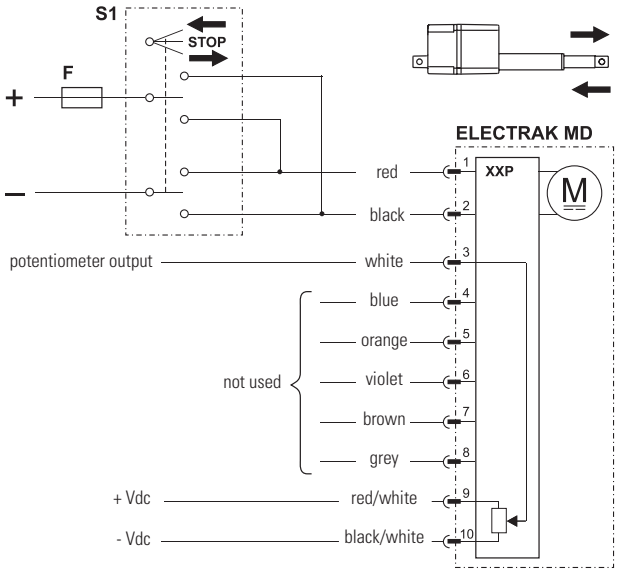

F Fuse
S1 Double pole double throw switch

Control option XXP works as option XXX but also has an analog (potentiometer) output that will provide feedback on the extension tube position.

Electrak® MD – Control Options

Control Option Type EXX

Actuator supply voltage MD12 MD24	[Vdc]	 9 - 16 18 - 32
Actuator current draw	[A]	see page 110

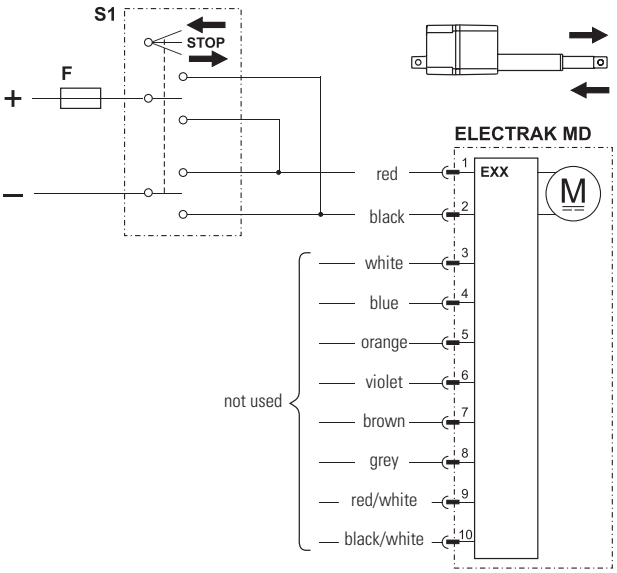

F Fuse
S1 Double pole double throw switch

Control option EXX contains all of the basic Electronic Monitoring Package features described on page six, guaranteeing safe operation of the actuator and equipment. With control option EXX, the polarity of the motor voltage is switched by a customer-supplied switch (switch, relay, etc.) to make the actuator extend or retract. The switch, power supply, wiring and all other components must be able to handle the motor current for the actuator model and load being used, as well as the inrush current (up to three times the max. continuous current for the max. load being used for up to 150 milliseconds).

Control Option Type EXP

Actuator supply voltage MD12 MD24	[Vdc]	 9 - 16 18 - 32
Actuator current draw	[A]	see page 110
Potentiometer type		wire-wound
Potentiometer max. input voltage	[Vdc]	32
Potentiometer max. power	[W]	1
Potentiometer linearity	[%]	± 0.25
Potentiometer output resolution MDxxA025, all strokes MDxxA100, all strokes MDxxA050, 50 - 250 mm stroke MDxxA200, 50 - 250 mm stroke MDxxA050, 300 mm stroke MDxxA200, 300 mm stroke	[ohm/mm]	 16.67 16.67 33.33 33.33 16.67 16.67

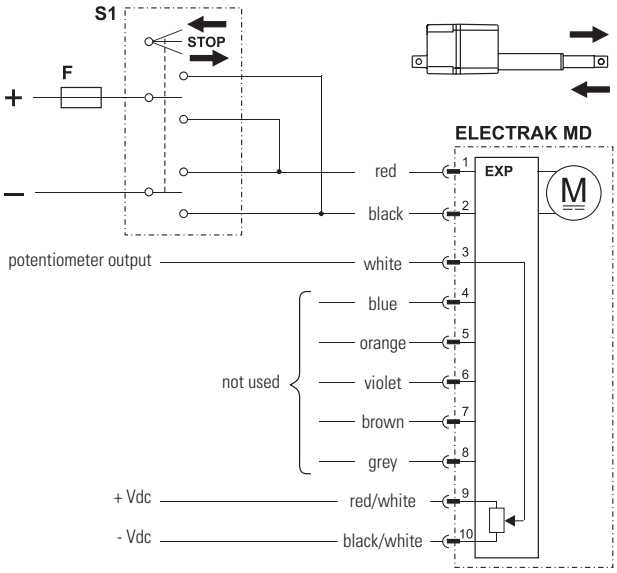

F Fuse
S1 Double pole double throw switch

Control option EXP works as option EXX but also has an analog (potentiometer) output that will provide feedback on the extension tube position.

Control Option Type LXX

Actuator supply voltage MD12 MD24	[Vdc]	 9 - 16 18 - 32
Actuator current draw	[A]	see page 110
Extend / retract input voltage	[Vdc]	9 - 32
Extend / retract input current	[mA]	6 - 22

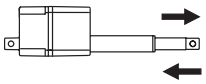

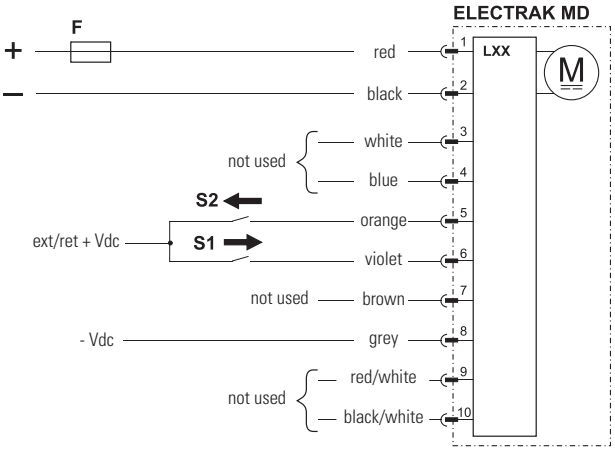

F Fuse
S1 Extend switch
S2 Retract switch

Control option LXX has all the basic Electronic Monitoring Package features included in control option EXX, but the polarity of the motor voltage is switched by the onboard electronics instead. The customer-supplied switches used to command the actuator to extend or retract only need to handle low-level signals. However, the power supply and wiring that supply the actuator must be able to handle the motor current for the actuator model and load being used, as well as the inrush current (up to one and a half times the max. continuous current for the max. load being used for up to 150 milliseconds).

Control Option Type LLX

Actuator supply voltage MD12 MD24	[Vdc]	 9 - 16 18 - 32
Actuator current draw	[A]	see page 110
Extend / retract input voltage	[Vdc]	9 - 32
Extend / retract input current	[mA]	6 - 22
End-of-stroke outputs max. voltage	[Vdc]	32
End-of-stroke outputs max. current	[mA]	25

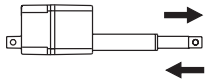

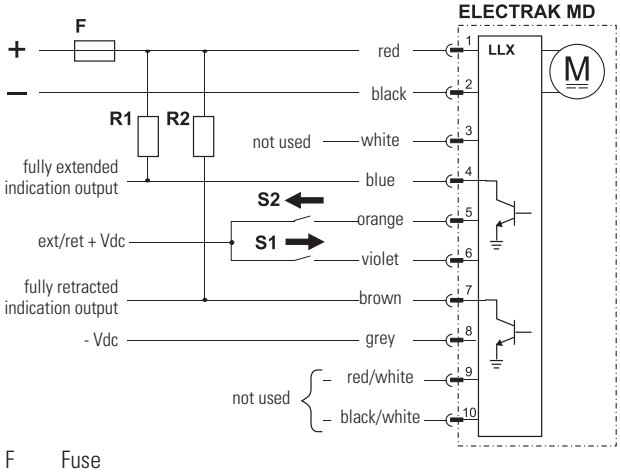

F Fuse
S1 Extend switch
S2 Retract switch
R1 Pull-up resistor
R2 Pull-up resistor

Control option LLX works as option LXX but also has two end-of-stroke indication outputs that will signal when the actuator is fully extended or fully retracted. Since these outputs are current sinking open collector outputs, they will each require an external pull-up resistor to operate effectively.

Electrak® MD – Control Options

Control Option Type LXP

Actuator supply voltage	[Vdc]	
MD12		9 - 16
MD24		18 - 32
Actuator current draw	[A]	see page 110
Potentiometer type		wire-wound
Potentiometer max. input voltage	[Vdc]	32
Potentiometer max. power	[W]	1
Potentiometer linearity	[%]	± 0.25
Potentiometer output resolution	[ohm/mm]	
MDxxA025, all strokes		16.67
MDxxA100, all strokes		16.67
MDxxA050, 50 - 250 mm stroke		33.33
MDxxA200, 50 - 250 mm stroke		33.33
MDxxA050, 300 mm stroke		16.67
MDxxA200, 300 mm stroke		16.67
Extend / retract input voltage	[Vdc]	9 - 32
Extend / retract input current	[mA]	6 - 22

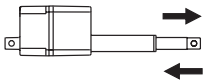

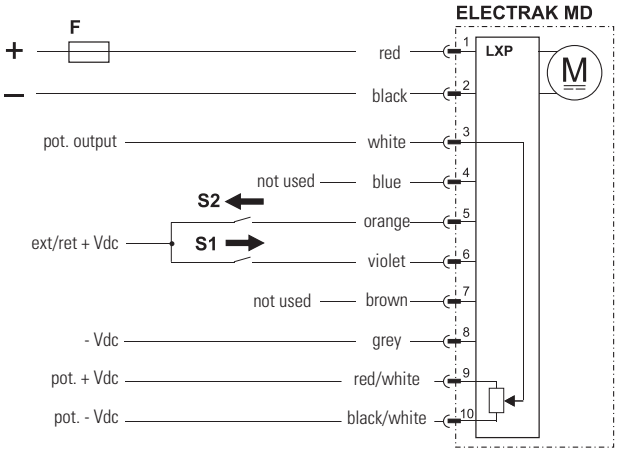

F Fuse
S1 Extend switch
S2 Retract switch

Control option LXP works as option LXX but also has an analog (potentiometer) output that will provide feedback on the extension tube position.

Control Option Type LLP

Actuator supply voltage	[Vdc]	
MD12		9 - 16
MD24		18 - 32
Actuator current draw	[A]	see page 110
Potentiometer type		wire-wound
Potentiometer max. input voltage	[Vdc]	32
Potentiometer max. power	[W]	1
Potentiometer linearity	[%]	± 0.25
Potentiometer output resolution	[ohm/mm]	
MDxxA025, all strokes		16.67
MDxxA100, all strokes		16.67
MDxxA050, 50 - 250 mm stroke		33.33
MDxxA200, 50 - 250 mm stroke		33.33
MDxxA050, 300 mm stroke		16.67
MDxxA200, 300 mm stroke		16.67
Extend / retract input voltage	[Vdc]	9 - 32
Extend / retract input current	[mA]	6 - 22
End-of-stroke outputs max. voltage	[Vdc]	32
End-of-stroke outputs max. current	[mA]	25

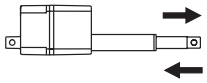

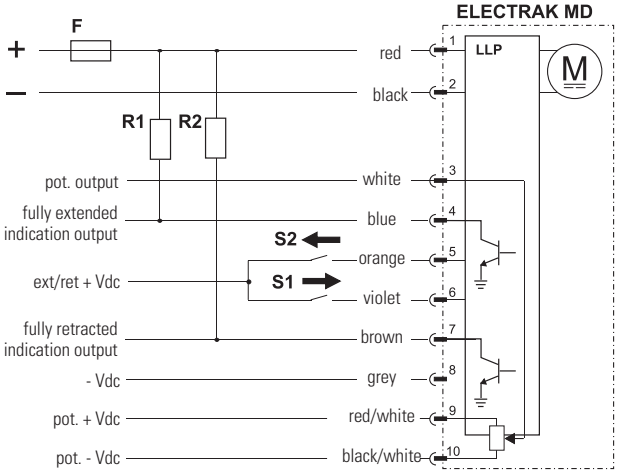

F Fuse
S1 Extend switch
S2 Retract switch
R1 Pull-up resistor
R2 Pull-up resistor

Control option LLP works as option LLX but also has an analog (potentiometer) output that will provide feedback on the extension tube position.

Electrak® MD – Control Options and Wire Harness Kits

Control Option Type CNO and COO

Actuator supply voltage MD12 MD24	[Vdc]	 9 - 16 18 - 32
Actuator current draw	[A]	see page 110
Command data includes: • position • speed • current		
Feedback data includes: • position • speed • current • other diagnostic information		
Manual extension/retraction input voltage	[Vdc]	9 - 32
Manual extension/retraction input current	[mA]	6 - 22

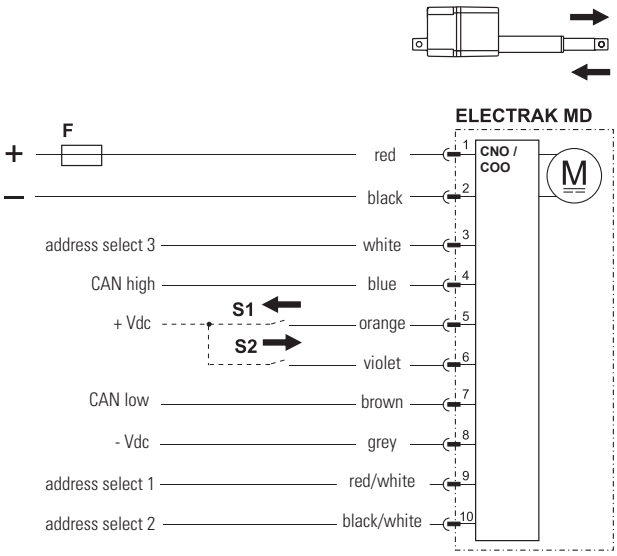

F Fuse
S1 Manual extension switch (optional)
S2 Manual retraction switch (optional)

Control option CNO has a J1939 CAN bus control interface, COO has a CANopen control interface that control and monitor the actuator. Extend and retract commands are sent via CAN messages on the CAN low and CAN high pins. Address select 1, 2 and 3 pins can be used as a binary encoded decimal (BCD) adder to the default address. This can be used when multiple CAN actuators are on a single bus. The actuator can be manually forced to extend or retract by using pin 6 (violet wire) and 5 (orange wire).

Wire Harness Kits

Part Number	Description
954-9423-001	0.3 meter long 10 wire cable
954-9423-002	1.0 meter long 10 wire cable
954-9423-003	2.0 meter long 10 wire cable

DMHD – Technical Features

SMART

Powered by the Electrak® HD

Standard Features

- Self-supporting column in extruded anodized aluminium with high load torque capability
- Onboard electronics with many optional functions
- 12 or 24 Vdc as standard input voltages
- Static load up to 18 kN (4050 lbf)
- Dynamic load up to 16 kN (3584 lbf)
- Stroke up to 600 mm
- Speed up to 71 mm/s (2.8 in/s)
- Protection class static IP65
- T-slot grooves along the entire profile
- Maintenance free

General Specifications

Screw type	ball
Nut type	load lock ball nut
Manual override	no
Anti-rotation	yes
Static load holding brake	yes
Safety features	Electrak monitoring package: current monitoring voltage monitoring temperature monitoring load trip point calibration internal end-of-stroke limit switches (1) end-of-stroke dynamic braking
Electrical connections	cable with flying leads
Compliances	CE

Optional Electronic Control Features

CANopen CAN bus
SAE J1939 CAN bus
Synchronization option
Low-level switching
Programmable limit switches
Signal-follower
End-of-stroke indication output
Analog position output
Digital position output

Control Option Combinations

EXX	Electrak Monitoring Package only
ELX	EXX + End-of-Stroke Indication Output
EXP	EXX + Analog Position Output
EXD	EXX + Digital Position Output
ELP	ELX + Analog Position Output
ELD	ELX + Digital Position Output
LXX	EXX + Low-Level Signal Motor Switching
LLX	EXX + LXX + End-of-Stroke Indication Output
LXP	EXX + LXX + Analog Position Output
LPS	EXX + LXX + Programmable Limit Switches + Signal-Follower
CNO	SAE J1939 CAN Bus Control + Open-Loop Speed Control
COO	CANopen CAN Bus Control + Open-Loop Speed Control
SY2	Synchronization Option

Accessories

T-slot bolts

Compatible Controls

Contact customer support at www.thomsonlinear.com/cs

(1) Dynamic braking is included at the ends of stroke for all DMHD actuators. Dynamic braking offered throughout the entire stroke length only on low-level switching and J1939 options.

DMHD – Technical Specifications

Mechanical Specifications

Max. static load [1]	[kN (lbf)]	18 (4050)
Max. dynamic load (Fx)	[kN (lbf)]	
DMHDxxB017		1.7 (382)
DMHDxxB026		2.6 (585)
DMHDxxB045		4.5 (1012)
DMHDxxB068		6.8 (1529)
DMHDxxB100		10 (2248)
DMHDxxB160		16 (3584)
Max. load torque, dyn. and static	[Nm (lbf-in)]	710 (6284)
Speed @ no load/max. load [2]	[mm/s (in/s)]	
DMHDxxB017		71/58 (2.8/2.28)
DMHDxxB026		40/32 (1.6/1.3)
DMHDxxB045		24/19 (0.94/0.75)
DMHDxxB068		18/14 (0.71/0.55)
DMHDxxB100		11/9 (0.43/0.35)
DMHDxxB160		7/5 (0.27/0.21)
Min. ordering stroke (S) length	[mm]	100
Max. ordering stroke (S) length [3]	[mm]	600
Ordering stroke length increments	[mm]	50
Operating temperature limits	[°C (F)]	- 40 – 85 (- 40 – 185)
Full load duty cycle @ 25 °C (77 °F)	[%]	25 [4]
End play, maximum	[mm (in)]	1.2 (0.047)
Protection class - static		IP65

[1] Max. static load at fully retracted stroke.
[2] For units with the synchronization option, the speed will vary slightly when synchronizing, but will typically remain close to the speed they are rated for at full load. See page 90 for more information on the synchronization option.
[3] 500 mm max. for 16 kN
[4] For DMHDxx-B100 and DMHDxx-160, unidirectional load, the duty cycle is 15%.
[5] Do not use PWM voltage for speed control to avoid damaging the onboard electronics.

Electrical Specifications

Available input voltages [5]	[Vdc]	12, 24
Input voltage tolerance	[Vdc]	
DMHD12 (12 Vdc input voltage)		9 - 16
DMHD24 (24 Vdc input voltage)		18 - 32
Current draw @ no load/max. load	[A]	
DMHD12B017		3/18
DMHD24B017		1.5/9
DMHD12B026		3/18
DMHD24B026		1.5/9
DMHD12B045		3/18
DMHD24B045		1.5/9
DMHD12B068		3/20
DMHD24B068		1.5/10
DMHD12B100		3/18
DMHD24B100		1.5/9
DMHD12B160		3/20
DMHD24B160		1.5/10
Motor leads cross section	[mm^2 (AWG)]	2 (14)
Signal leads cross section	[mm^2 (AWG)]	0.5 (20)
Standard cable lengths	[m (in)]	1.5, 5 (59, 197)
Cable diameter	[mm (in)]	7.5 (.295)
Flying lead length	[mm (in)]	76 (3)
Stripped lead length	[mm (in)]	6 (0.25)

DMHD – Dimensions

Dimensions	Projection
mm [inch]	

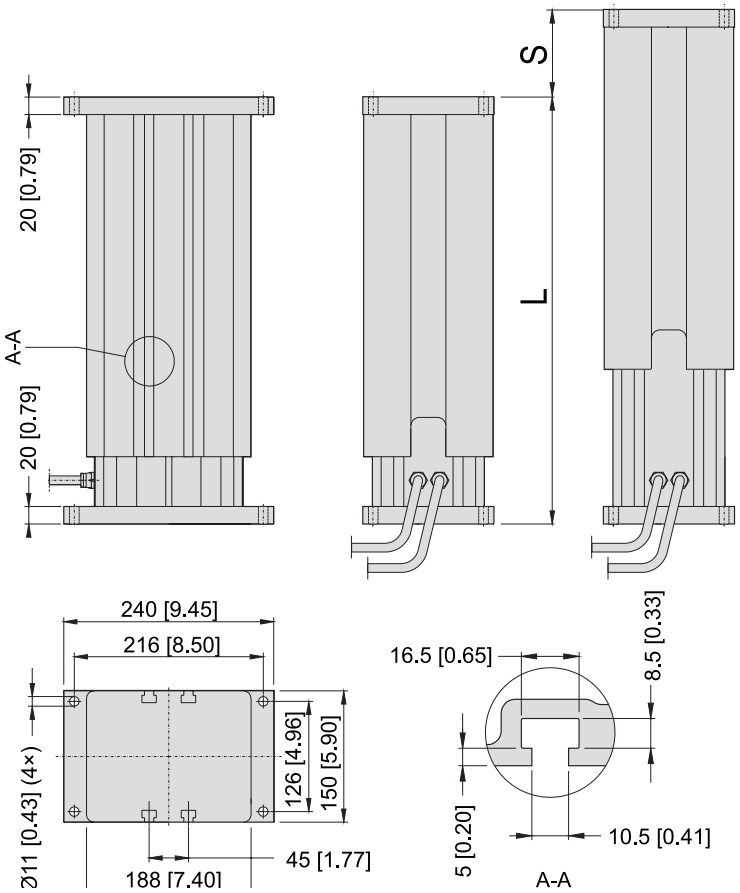

Note. All models have two cables except models with control option EXX which has one placed in the center of the profile.

Stroke, Retracted Length and Weight Relationships

Ordering stroke (S)	[mm]	100	150	200	250	300	350	400	450	500	550	600
Retracted length (A) for DMHDxxB017(026,045,068)	[mm]	357	407	457	507	557	657	707	757	807	857	907
	[in]	14.1	16.0	18.0	20.0	21.9	25.9	27.8	29.8	31.8	33.7	35.7
Weight for DMHDxxB017(026,045,068)	[kg]	21.8	23.3	24.9	26.4	28.0	30.8	32.3	33.8	35.5	37.0	38.5
	[lbs]	48.0	51.3	54.8	58.1	61.6	67.8	71.1	74.4	78.1	81.4	84.7
Retracted length (A) for DMHDxxB100	[mm]	407	457	507	557	607	657	707	757	807	857	907
	[in]	16.0	18.0	20.0	21.9	23.9	23.9	27.8	29.8	31.8	33.7	35.7
Weight for DMHDxxB100	[kg]	22.0	23.6	25.1	26.7	28.2	31.1	32.5	34.7	36.4	38.0	39.5
	[lbs]	48.4	51.9	55.2	58.7	62.0	68.4	71.5	76.3	80.1	83.6	86.9
Retracted length (A) for DMHDxxB160 *	[mm]	407	457	507	557	607	657	707	757	807	-	-
	[in]	16.0	18.0	20.0	21.9	23.9	23.9	27.8	29.8	31.8	-	-
Weight for DMHDxxB160 *	[kg]	22.3	23.9	25.4	27.0	28.5	31.4	32.5	34.7	36.4	-	-
	[lbs]	49.1	52.6	55.9	59.4	62.7	69.1	71.5	76.3	80.1	-	-

* Max. stroke for DMHDxxB160 (16 kN (3584 lbf)) is 500 mm.

DMHD – Performance Diagrams

Load vs. Speed [1]

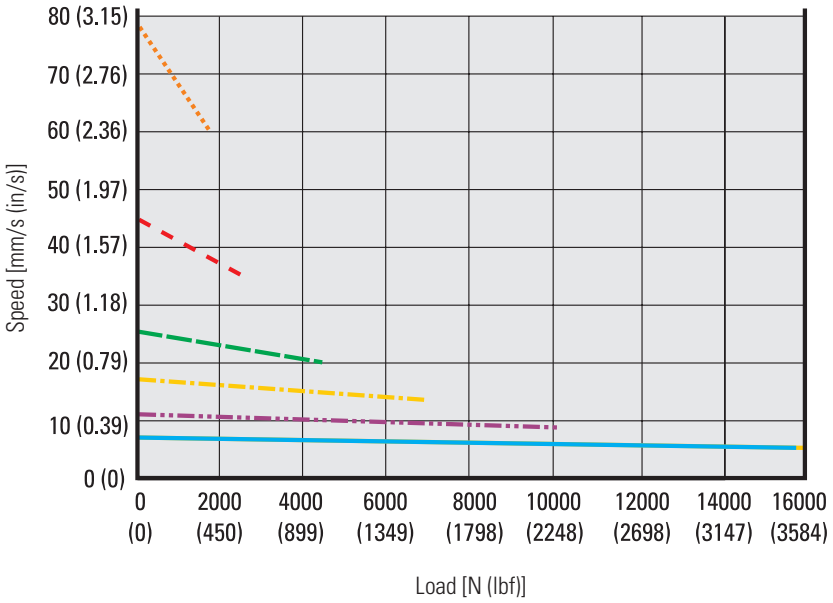

Off Center Load Capacity

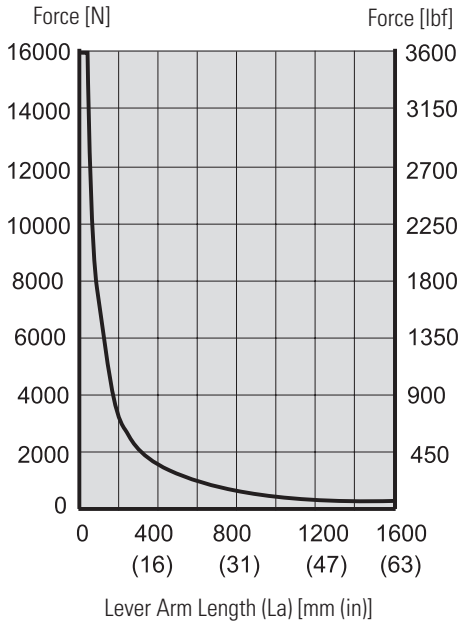

[1] Curves valid for all units except those with the synchronization option, where the speed at any load is 25% lower than for those without.

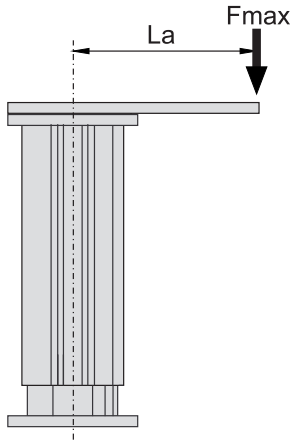

Load vs. Current

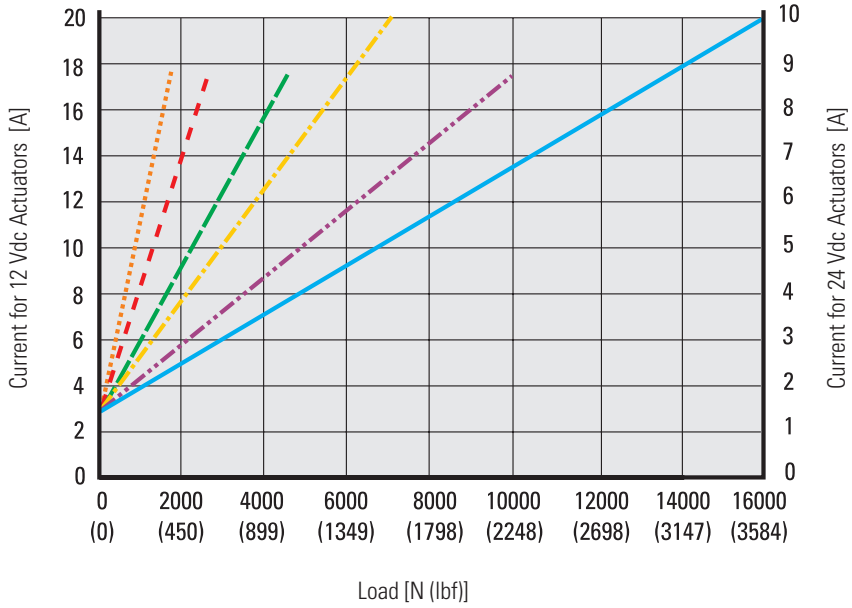

DMHDxxB017 (1.7 kN (382 lbf))
DMHDxxB026 (2.6 kN (585 lbf))
DMHDxxB045 (4.5 kN (1012 lbf))
DMHDxxB068 (6.8 kN (1529 lbf))
DMHDxxB100 (10 kN (2248 lbf))
DMHDxxB160 (16 kN (3584 lbf))

Note! Curves were generated at an ambient temperature of 21°C (70°F). Different ambient temperature and individual actuator characteristics can produce slightly different values.

DMHD – Ordering Key

Ordering Key

1	2	3	4	5
DMHD12-	**B026-**	**0300**	**LXX**	**1**

1. Model and input voltage
DMHD12- = lifting column type DMHD, 12 Vdc
DMHD24- = lifting column type DMHD, 24 Vdc

2. Screw type, dynamic load capacity
B017- = ball screw, 1.7 kN (382 lbf)
B026- = ball screw, 2.6 kN (585 lbf)
B045- = ball screw, 4.5 kN (1012 lbf)
B068- = ball screw, 6.8 kN (1529 lbf)
B100- = ball screw, 10 kN (2248 lbf)
B160- = ball screw, 16 kN (3584 lbf)

3. Ordering stroke length (1) (2)
0100 = 100 mm
0150 = 150 mm
0200 = 200 mm
0250 = 250 mm
0300 = 300 mm
0350 = 350 mm
0400 = 400 mm
0450 = 450 mm
0500 = 500 mm
0550 = 550 mm
0600 = 600 mm

4. Electrak Modular Control System options
EXX = Electronic Monitoring Package only
ELX = EXX + end-of-stroke indication output
EXP = EXX + analog (potentiometer) position output
EXD = EXX + digital position output
ELP = ELX + analog (potentiometer) position output
ELD = ELX + digital position output
LXX = EXX + low-level signal motor switching
LLX = EXX + LXX + end-of-stroke indication output
LXP = EXX + LXX +analog (potentiometer) position output
LPS = EXX + LXX + programmable limit switches + signal-follower
CNO = SAE J1939 CAN bus + open-loop speed control
COO = CANopen CAN bus + open-loop speed control
SY2 = LXX + Synchronization option

5. Cable length and connection type
1 = 1.5 m long cable with flying leads
2 = 5.0 m long cable with flying leads

(1) Other stroke lengths available upon request. Contact customer support
(2) Max. stroke for DMHDxxB160 (16 kN (3584 lbf)) is 500 mm.

DMHD – Electrical Connections

Option Type EXX

Actuator supply voltage	[Vdc]	
DMHD12		12
DMHD24		24

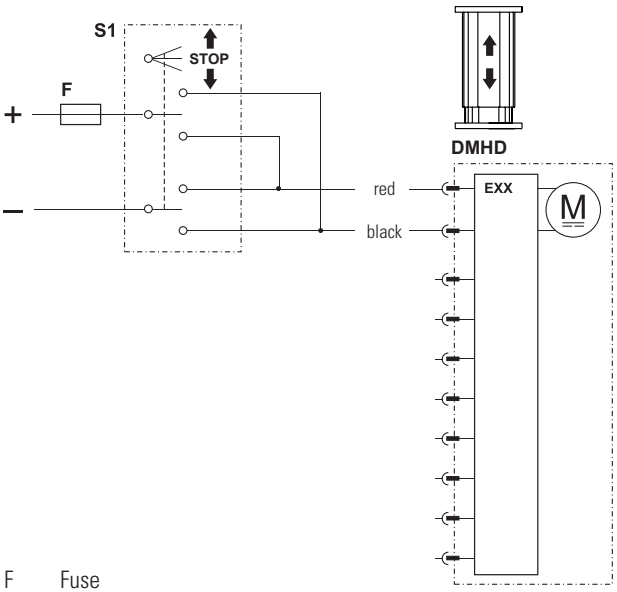

F Fuse
S1 Double pole double throw switch

Control option EXX contains Electrak Monitoring Package features, guaranteeing safe operation of the actuator and equipment. With control option EXX, the polarity of the motor voltage is switched by a customer-supplied switch (switch, relay, etc.) to make the actuator extend or retract. The switch, power supply, wiring and all other components must be able to handle the motor current for the actuator model and load being used, as well as the inrush current (up to three times the max. continuous current for the max. load being used for up to 150 milliseconds).

Option Type ELX

Actuator supply voltage	[Vdc]	
DMHD12		12
DMHD24		24
Output contact type		potential free
Limit switch max. switch voltage	[Vdc]	140
Limit switch max. switch current	[mA]	350
Limit switch max. switch power	[W]	5

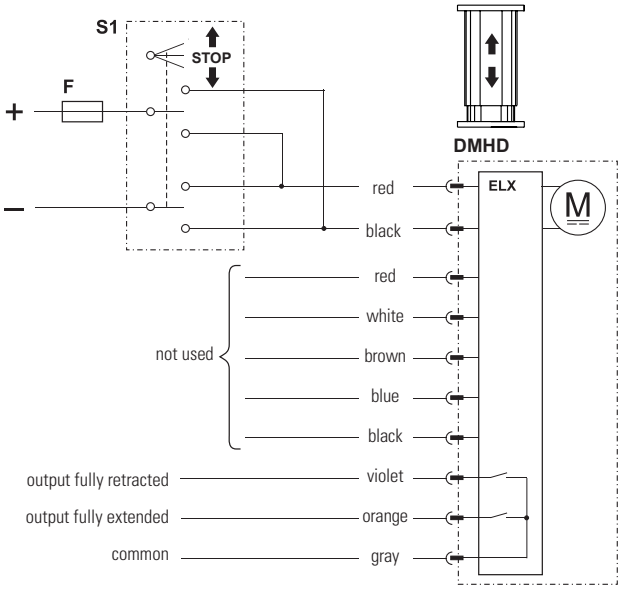

F Fuse
S1 Double pole double throw switch

Control option ELX works as option EXX but also has two outputs that indicate when the extension tube is in its fully extended or retracted position.

DMHD – Electrical Connections

Option Type EXP

Actuator supply voltage	[Vdc]	
DMHD12		9 - 16
DMHD24		18 - 32
Potentiometer type		wire-wound
Potentiometer max. input voltage	[Vdc]	32
Potentiometer max. power	[W]	1
Potentiometer linearity	[%]	± 0.25
Potentiometer output resolution	[ohm/mm]	
50 - 100 mm stroke		65.6
150 - 250 mm stroke		32.8
300 - 500 mm stroke		19.7
550 - 600 mm stroke		9.8

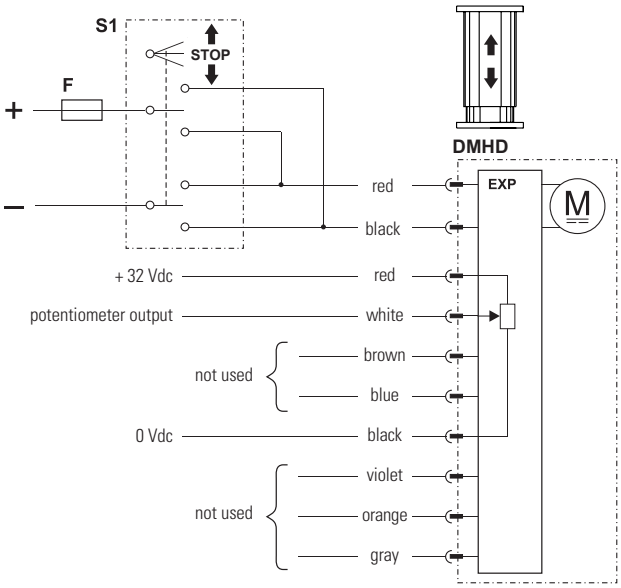

F Fuse
S1 Double pole double throw switch

Control option EXP works as option EXX but also has an analog (potentiometer) output that will provide feedback on the extension tube position.

Option Type EXD

Actuator supply voltage	[Vdc]	
DMHD12		9 - 16
DMHD24		18 - 32
Encoder type		hall effect
Encoder input voltage	[Vdc]	4 - 24
Encoder output voltage levels	[Vdc]	
low (logical zero), typical / max.		0.1 / 0.25
Encoder resolution	[mm/pulse]	
DMHDxx-B017		0.28
DMHDxx-B026		0.15
DMHDxx-B045		0.09
DMHDxx-B068		0.07
DMHDxx-B100		0.04
DMHDxx-B160		0.03

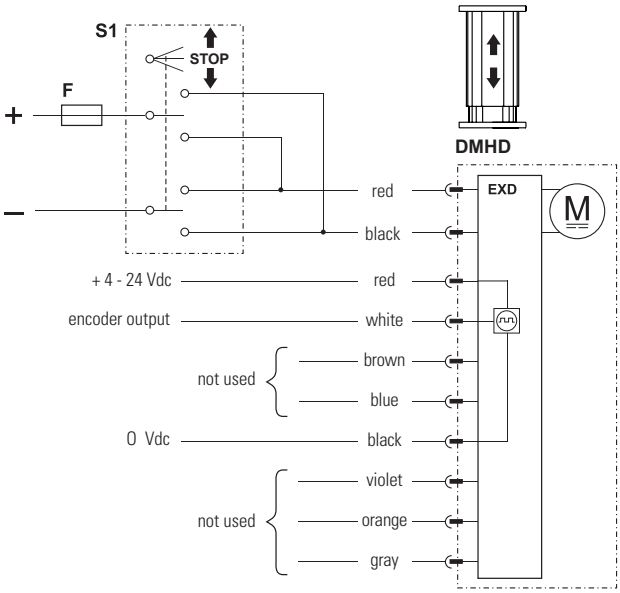

F Fuse
S1 Double pole double throw switch

Control option EXD works as option EXX but also has a single-channel encoder output that will provide feedback on the extension tube position.

Option Type ELP

Actuator supply voltage DM HD12 DMHD24	[Vdc]	 9 - 16 18 - 32
Output contact type		potential free
Max. output voltage	[Vdc]	140
Max. output current	[mA]	350
Max. output power	[W]	5
Potentiometer type		wire-wound
Potentiometer max. input voltage	[Vdc]	32
Potentiometer max. power	[W]	1
Potentiometer linearity	[%]	± 0.25
Potentiometer output resolution 50 - 100 mm stroke 150 - 250 mm stroke 300 - 500 mm stroke 550 - 600 mm stroke	[ohm/mm]	 65.6 32.8 19.7 9.8

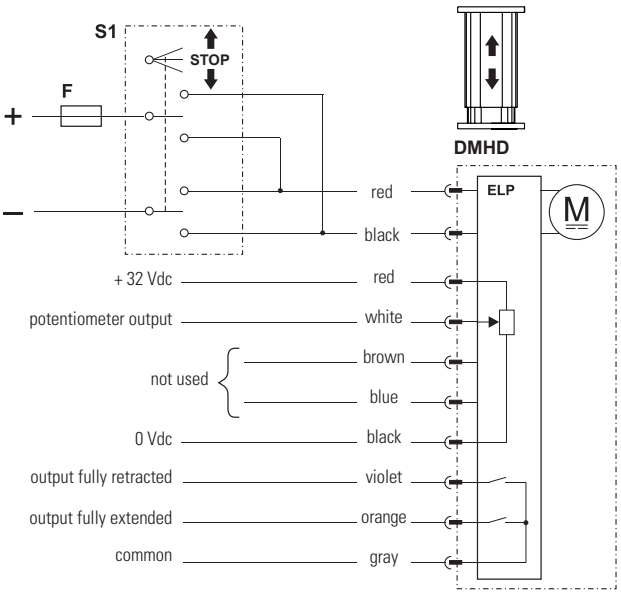

F Fuse
S1 Double pole double throw switch

Control option ELP works as option EXP but also has two outputs that indicate when the extension tube is in its fully extended or retracted position.

Option Type ELD

Actuator supply voltage DMHD12 DMHD24	[Vdc]	 9 - 16 18 - 32
Output contact type		potential free
Max. output voltage	[Vdc]	140
Max. output current	[mA]	350
Max. output power	[W]	5
Encoder type		hall effect
Encoder input voltage	[Vdc]	4 - 24
Encoder output voltage levels low (logical zero), typical / max.	[Vdc]	 0.1 / 0.25
Encoder resolution DMHDxx-B017 DMHDxx-B026 DMHDxx-B045 DMHDxx-B068 DMHDxx-B100 DMHDxx-B160	[mm/pulse]	 0.28 0.15 0.09 0.07 0.04 0.03

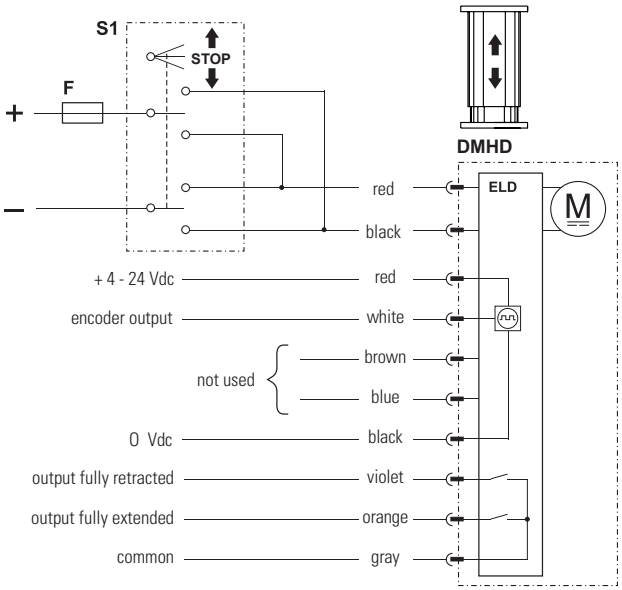

F Fuse
S1 Double pole double throw switch

Control option ELD works as option EXD but also has two outputs that indicate when the extension tube is in its fully extended or retracted position.

DMHD – Electrical Connections

Option Type LXX		
Actuator supply voltage DMHD12 DMHD24	[Vdc]	 9 - 16 18 - 32
Extend / retract input voltage	[Vdc]	9 - 32
Extend / retract input current	[mA]	6 - 22

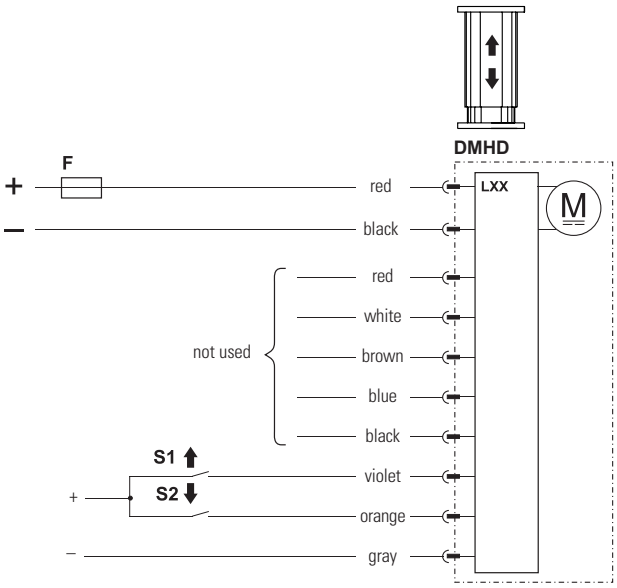

F Fuse
S1 Extend switch
S2 Retract switch

Control option LXX has all the basic Electrak Monitoring Package features included in control option EXX, but the polarity of the motor voltage is switched by the onboard electronics instead. The customer-supplied switches used to command the actuator to extend or retract only need to handle low-level signals. However, the power supply and wiring that supply the actuator must be able to handle the motor current for the actuator model and load being used, as well as the inrush current (up to one and a half times the max. continuous current for the max. load being used for up to 150 milliseconds).

Option Type LLX		
Actuator supply voltage DMHD12 DMHD24	[Vdc]	 9 - 16 18 - 32
Output contact type		potential free
Max. switched output voltage	[Vdc]	140
Max. output current	[mA]	350
Max. output power	[W]	5
Extend / retract input voltage	[Vdc]	9 - 32
Extend / retract input current	[mA]	6 - 22

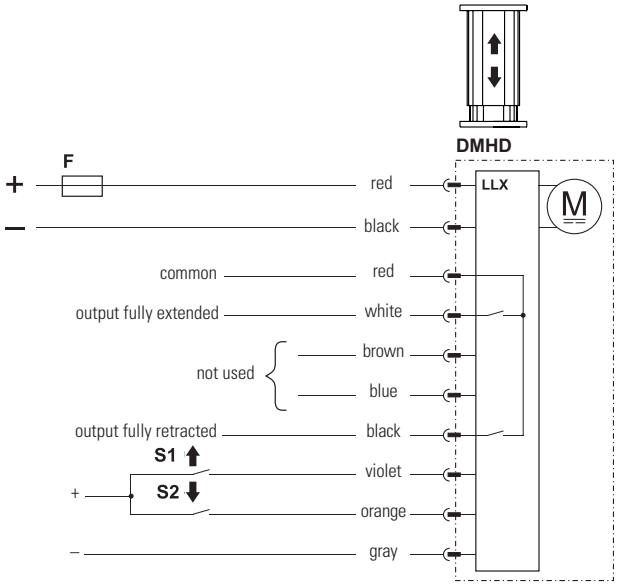

F Fuse
S1 Extend switch
S2 Retract switch

Control option LLX works as option LXX but also has two outputs that indicate when the extension tube is in its fully extended or retracted position.

Option Type LXP

Actuator supply voltage DMHD12 DMHD24	[Vdc]	 9 - 16 18 - 32
Potentiometer type		wire-wound
Potentiometer max. input voltage	[Vdc]	32
Potentiometer max. power	[W]	1
Potentiometer linearity	[%]	± 0.25
Potentiometer output resolution 50 - 100 mm stroke 150 - 250 mm stroke 300 - 500 mm stroke 550 - 600 mm stroke	[ohm/mm]	 65.6 32.8 19.7 9.8
Extend / retract input voltage	[Vdc]	9 - 32
Extend / retract input current	[mA]	6 - 22

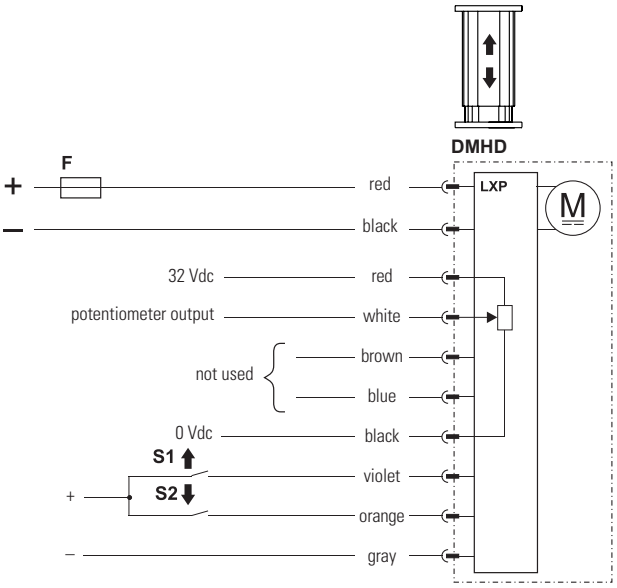

F Fuse
S1 Extend switch
S2 Retract switch

Control option LXP works as option LXX but also has an analog (potentiometer) output that will provide feedback on the extension tube position.

Option Type LPS

Actuator supply voltage DMHD12 DMHD24	[Vdc]	 9 - 16 18 - 32
Signal-follower input voltage	[Vdc]	0.5 - 4.5
Signal-follower max. current	[A]	0.8
Signal-follower movement	[mm/Vdc]	
Signal-follower repeatability	[± mm]	0.1
Programming inputs voltage	[Vdc]	9 - 32
Extend / retract input voltage	[Vdc]	9 - 32
Extend / retract input current	[mA]	6 - 22

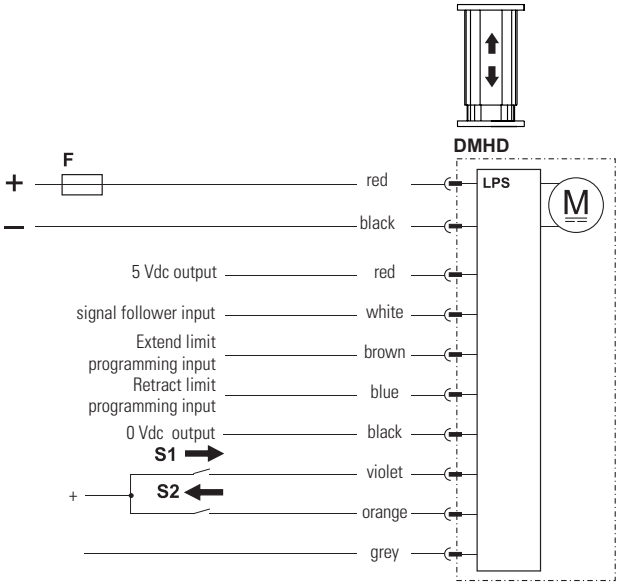

F Fuse
S1 Extend switch
S2 Retract switch

Control option LPS works as option LXX but also has programmable mid stroke software extend and retract limits as well as a signal-follower input that allow the extension tube position to be controlled from a potentiometer or another voltage control.

DMHD – Electrical Connections

Option Type SY2		
Actuator supply voltage	[Vdc]	
DMHD12		9 - 16
DMHD24		18 - 32
Extend / retract input voltage	[Vdc]	9 - 32
Extend / retract input current	[mA]	6 - 22
Number of synchronized actuators		2 - 8
Max. actuator speed difference	[%]	25
Hold and wait distance	[mm]	
DMHDxx-B017		25.0
DMHDxx-B026		15.0
DMHDxx-B045		10.0
DMHDxx-B068		7.5
DMHDxx-B100		5.0
DMHDxx-B160		2.5

Control option SY2 works as option LXX but also has a synchronization feature, allowing up to eight actuators having the SY2 option to run in integrated motion. When using the low-level extend and retract inputs on the master actuator, the receiver(s) will follow. If there is a need to run an actuator individually, it is possible to put it into an override state by closing a switch (S3) connected to the red lead as shown in the wiring diagram.

Important Design Notes

- All actuators' supply voltages must be within ±10% of each other.
- While uneven loads can be supported, it is suggested that loads be distributed as evenly as possibly to avoid overloading a single actuator within the system.
- The speed of the actuators will typically remain close to the speed they are rated for at full load, even if running at a lower load.
- If a unit detects that it is 1 mm further ahead of any other in the network, it will reduce its speed slightly to allow the other to catch up. If the positional difference between an actuator and the rearmost actuator exceeds the hold and wait distance specified in the table above, the unit will stop until the rearmost actuator catches up.
- If one actuator encounters an overload condition or detects that the measured position isn't updating while running the motor, it will trip the overload protection and send a signal to each actuator on the network to stop. The units can be immediately reversed (unless they bind up the system), or they can continue in the same direction after a power reset.
- Each actuator tracks the total number of actuators that are connected to the system. No synchronous motion will be allowed if any actuator detects that fewer than the minimum number of required actuators are connected. This allows the whole system to stop if the power or communication is lost to any actuator in the system.

F Fuses
S1 Extend switch
S2 Retract switch
S3 Override/reset switch
R Resistors 120 Ohm

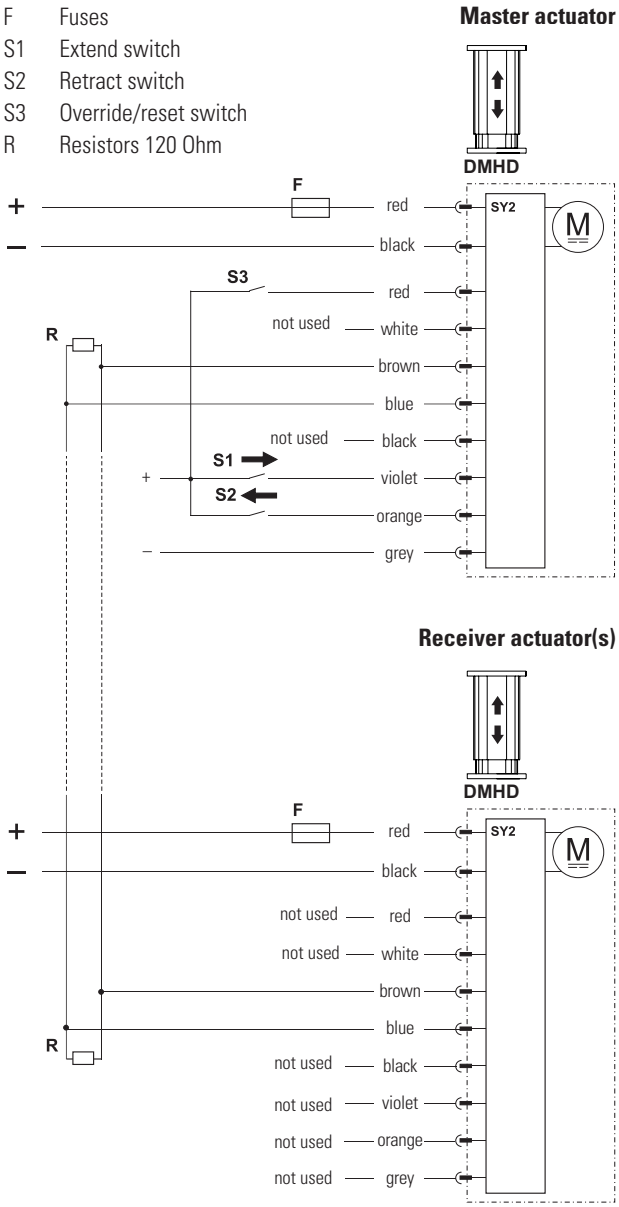

- Activating the override/reset signal on any of the actuators will reset the minimum number of required actuators that must be connected to the system to 0. If more actuators are connected at any point, the minimum number of required actuators will be updated to the number of actuators that are currently connected.
- In order to give the master and receiver(s) enough time to communicate, a 250 ms delay will be enforced following any motion and before any subsequent motion is allowed.

DMHD – Electrical Connections

Option Type CNO and COO

Actuator supply voltage [Vdc] DMHD12 DMHD24	 9 - 16 18 - 32
Command data includes: • position • speed • current	
Feedback data includes: • position • speed • current • other diagnostic information	
Extend / retract input voltage [Vdc] DMHD12(24)	 9 - 32
Extend / retract input current [mA]	6 - 22

F Fuse
S1 Manual extension switch (optional)
S2 Manual retraction switch (optional)

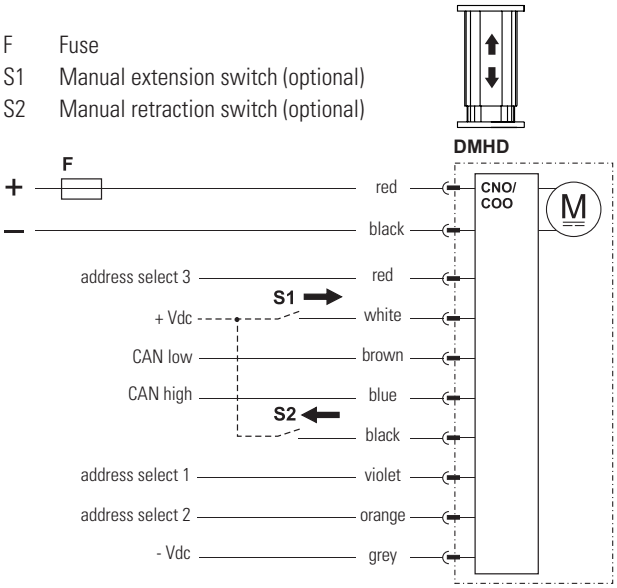

Control option CNO has a SAE J1939 CAN bus control interface and COO a CANopen interface to control and monitor the actuator. Extend and retract commands are sent via CAN messages on the CAN low and CAN high pins. Address select 1, 2 and 3 pins can be used as a binary encoded decimal (BCD) adder to the default address. This can be used when multiple actuators are located on a single bus. The actuator can be manually forced to extend or retract by using the inputs on white and black wires. When the manual control inputs are used, CAN bus messages are ignored, but the unit will still provide CAN bus feedback messages. When the inputs are left floating, CAN bus functionality for control messages is restored.

DMHD – Accessories

T-slot Bolt

Designation	Part Number
M10 T-slot bolt	D800041

The T-slot bolt fits in to the T-slot running along the outer profile of the lifting column. The T-slot bolts can be used to mount the unit instead of using the upper mounting plate, or/and for attaching other components to the profile.

Dimensions
mm

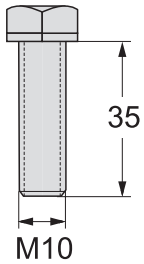

Electrak® GX DC – Technical Features

Standard Features

- Robust and reliable
- 12, 24, 36, 48 or 90 Vdc as standard input voltages
- Acme and ball screw models
- Static load up to 18 kN (4000 lbf)
- Dynamic load up to 9 kN (2000 lbf)
- Stroke up to 24 in (609 mm)
- Speed up to 61 mm/s (2.4 in/s)
- Protection class static IP66
- Overload clutch for mid and end of stroke protection
- Motor with thermal switch
- Maintenance free

General Specifications

Screw type	acme or ball
Nut type Dxxx-xxA (acme screw) Dxxx-xxB (ball screw)	 self locking lead nut load lock ball nut
Manual override	no (optional)
Anti-rotation	no
Static load holding brake acme screw models ball screw models	 no (self locking) yes
Safety features	overload clutch motor auto reset thermal switch
Electrical connections no potentiometer option with potentiometer option	 flying leads with or without connector cable with or without connector
Compliances standard optional	 – CE, UKCA [(1) (2)]

(1) Actuators used in the EU must be in compliance with CE
(2) The 90 Vdc model cannot be delivered in compliance with CE.

Optional Mechanical Features

Variety of front and rear adapters
Manual override

Optional Electrical Features

Potentiometer feedback

Accessories

Mechanical	Mounting pins

Compatible Controls

Contact customer support at www.thomsonlinear.com/cs

Electrak GX DC – Technical Specifications

Mechanical Specifications

Max. static load [1]	[N (lbf)]	
Dxx-xxA (acme screw)		11350 (2500)
Dxx-xxB (ball screw)		18000 (4000)
Max. dynamic load (Fx)	[N (lbf)]	
Dxxx-05A5		1100 (250)
Dxxx-10A5		2250 (500)
Dxxx-20A5		2250 (500)
Dxxx-05B5		2250 (500)
Dxxx-10B5		4500 (1000)
Dxxx-20B5		4500 (1000)
Dxxx-21B5		6800 (1500)
Dxxx-2KB5		9000 (2000)
Speed @ no load/max. load	[mm/s (in/s)]	
Dxxx-05A5		54/32 (2.10/1.20)
Dxxx-10A5		30/18 (1.20/0.70)
Dxxx-20A5		15/12 (0.67/0.45)
Dxxx-05B5		61/37 (2.40/1.40)
Dxxx-10B5		30/19 (1.30/0.80)
Dxxx-20B5		15/12 0.60/0.45)
Dxxx-21B5		15/11 (0.60/043)
Dxxx-2KB5		15/9 (0.60/0.40)
Min. ordering stroke (S) length	[in]	2
Max. ordering stroke (S) length [2] [3] [4]	[in]	24
Ordering stroke length increments	[in]	2
Operating temperature limits	[°C (F)]	- 25 – 65 (- 15 – 150)
Full load duty cycle @ 25 °C (77 °F)	[%]	25
End play, maximum	[mm (in)]	1.0 (0.04)
Restraining torque	[Nm (lbf-in)]	11.3 (100)
Protection class - static, standard (optional)		IP66 (IP66 & IP69K)
Salt spray resistance	[h]	96

(1) Max. static load at fully retracted stroke
(2) Max. ordering stroke length for Dxx-2KB5 is 12 inches
(3) Max. ordering stroke length for Dxx-21B5 is 20 inches
(4) For other strokes, contact customer support

Electrical Specifications

Available input voltages [1] [2]	[Vdc]	12, 24, 36, 48, 90
Input voltage tolerance	[%]	± 10
Current draw @ no load/max. load	[A]	
D12x-05A5		12.0/33.0
D12x-10A5		8.0/27.0
D12x-20A5		3.0/15.0
D12x-05B5		8.0/28.0
D12x-10B5		5.0/27.0
D12x-20B5		3.0/13.0
D12x-21B5		3.0/20.0
D12x-2KB5		4.0/25.0
D24x-05A5		6.0/16.5
D24x-10A5		4.0/13.5
D24x-20A5		1.5/7.5
D24x-05B5		4.0/14.0
D24x-10B5		2.5/13.5
D24x-20B5		1.5/7.5
D24x-21B5		1.5/10.0
D24x-2KB5		2.0/12.5
D36x-05A5		4.0/11.0
D36x-10A5		2.67/9.0
D36x-20A5		1.0/5.1
D36x-05B5		2.67/9.3
D36x-10B5		1.67/9.0
D36x-20B5		1.0/5.1
D36x-21B5		1.0/6.7
D36x-2KB5		1.34/8.4
D48x-05A5		3.0/8.3
D48x-10A5		2.0/6.8
D48x-20A5		0.8/3.8
D48x-05B5		2.0/7.0
D48x-10B5		1.3/6.8
D48x-20B5		0.8/3.8
D48x-21B5		0.8/5.0
D48x-2KB5		1.0/6.3
D90x-05A5		1.5/4.1
D90x-10A5		1.0/3.4
D90x-20A5		0.4/1.9
D90x-05B5		1.0/3.5
D90x-10B5		0.6/3.4
D90x-20B5		0.4/1.9
D90x-21B5		0.4/2.5
D90x-2KB5		0.5/3.2
Flying leads length	[mm (in)]	165 (7.5)
Flying leads diameter	[mm (in)]	3 (0.12)
Flying leads cross section	[mm^2 (AWG)]	2 (14)
Cable length with option pot.	[mm (in)]	600 (24)
Cable diameter with option pot.	[mm (in)]	9 (0.35)
Cable leads cross section with option potentiometer	[mm^2 (AWG)]	
motor leads		2.5 (14)
potentiometer leads		1.5 (16)

(1) For other input voltages - contact customer support.
(2) 90 Vdc model not CE compliant.

Electrak® GX DC – Dimensions

Dimensions	Projection
mm [inch]	

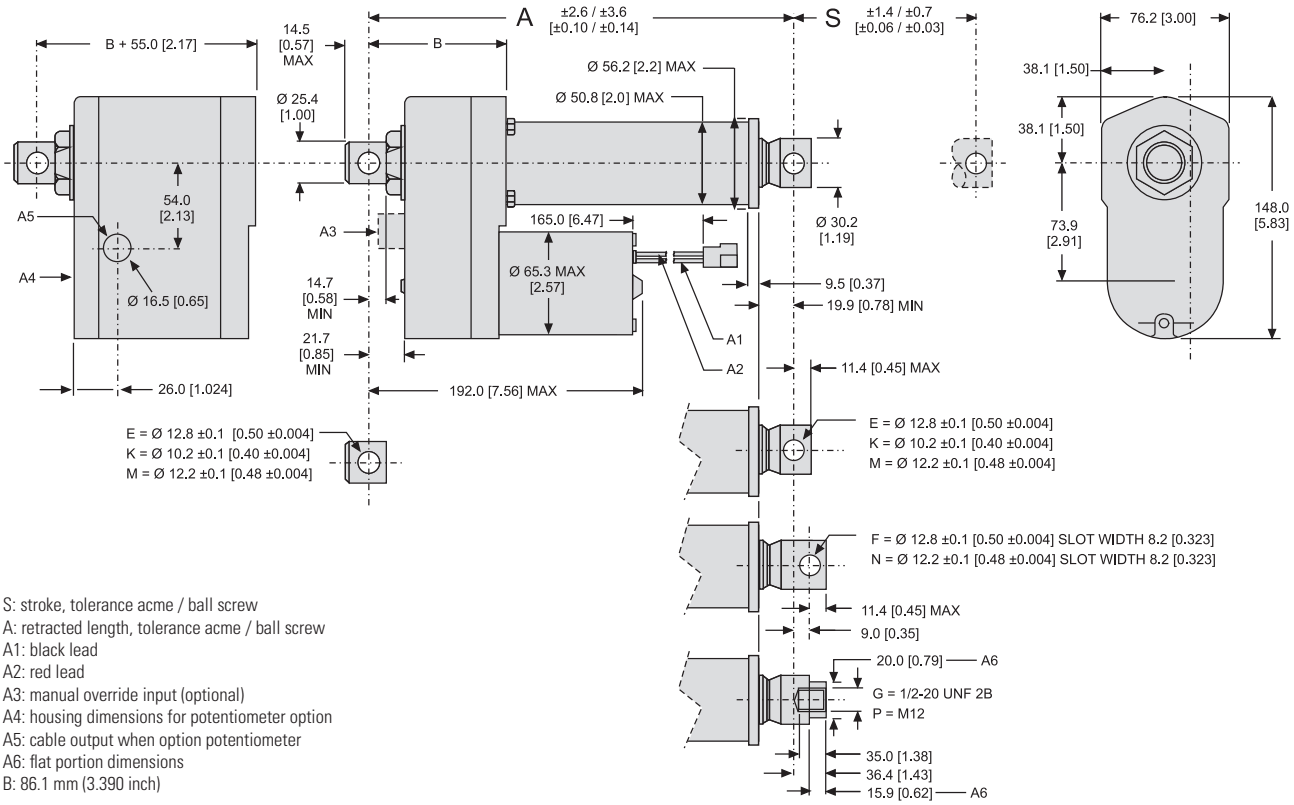

S: stroke, tolerance acme / ball screw
A: retracted length, tolerance acme / ball screw
A1: black lead
A2: red lead
A3: manual override input (optional)
A4: housing dimensions for potentiometer option
A5: cable output when option potentiometer
A6: flat portion dimensions
B: 86.1 mm (3.390 inch)

Stroke, Retracted Length and Weight Relationships

Ordering stroke (S)	[in]	2	4	6	8	10	12	14	16	18	20	22	24
Retracted length, acme screw models (A)	[mm]	211.3	262.1	312.9	363.7	414.5	465.3	583.7	634.5	685.3	736.1	786.9	837.7
	[in]	8.32	10.32	12.32	14.32	16.32	18.32	22.98	24.98	26.98	28.98	30.98	32.98
Retracted length, ball screw models (A)	[mm]	251.5	302.3	353.1	403.9	454.7	505.5	623.6	674.4	725.2	776.0	826.8	877.6
	[in]	9.90	11.90	13.90	15.90	17.90	19.90	24.55	26.55	28.55	30.55	32.55	34.55
Add on length for option potentiometer	[mm]	55.0											
	[in]	2.17											
Weight, acme screw models	[kg]	4.4	4.6	4.8	5.0	5.1	5.3	5.5	5.6	5.8	5.9	6.1	6.2
	[lbs]	9.7	10.1	10.6	11.0	11.2	11.7	12.1	12.3	12.8	13.0	13.4	13.6
Weight, ball screw models	[kg]	5.0	5.2	5.4	5.6	5.8	6.0	6.1	6.2	6.4	6.5	6.7	6.9
	[lbs]	11.0	11.4	11.9	12.3	12.8	13.2	13.4	13.6	14.1	14.3	14.7	15.2
Add on weight for option potentiometer	[kg]	1.30											
	[lbs]	2.86											

Electrak GX DC – Performance Diagrams

Load vs. Speed

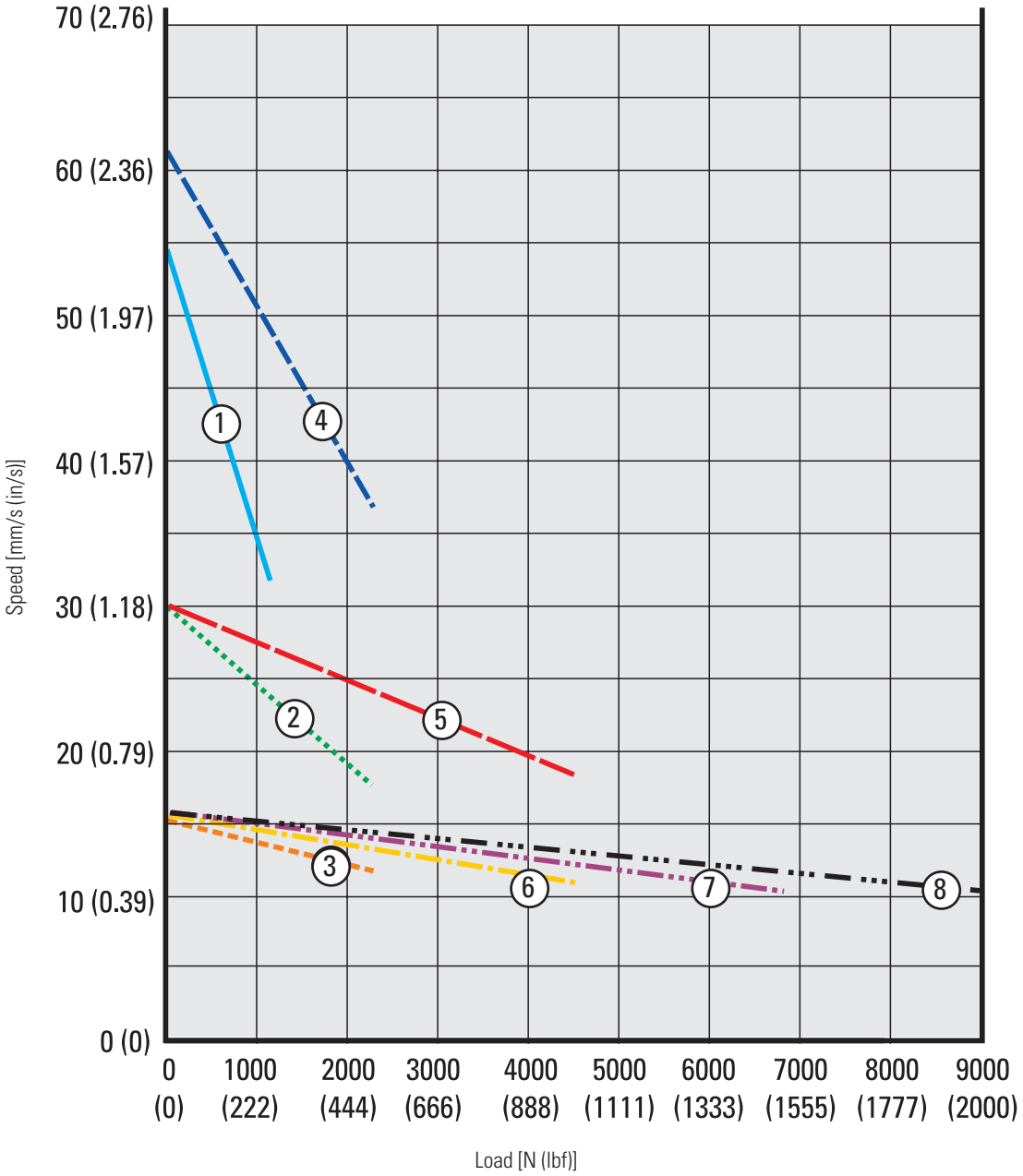

1. Dxxx-05A5 (1100 N (250 lbf))
2. Dxxx-10A5 (2250 N (500 lbf))
3. Dxxx-20A5 (2250 N (500 lbf))
4. Dxxx-05B5 (2250 N (500 lbf))
5. Dxxx-10B5 (4500 N (1000 lbf))
6. Dxxx-20B5 (4500 N (1000 lbf))
7. Dxxx-21B5 (6800 N (1500 lbf))
8. Dxxx-2KB5 (9000 N (2000 lbf))

Electrak® GX DC – Performance Diagrams

Load vs. Current for 12 and 24 Vdc actuators

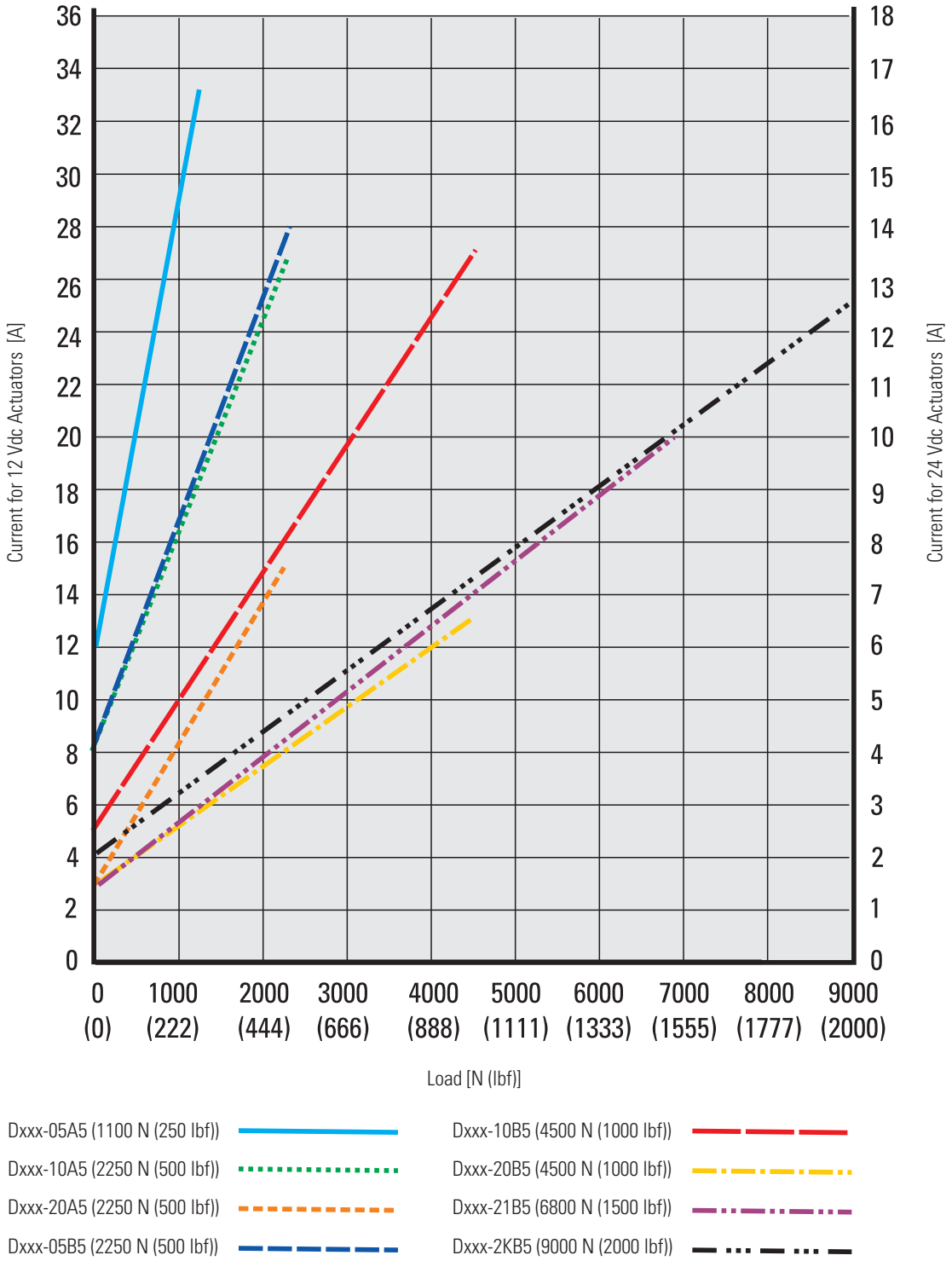

Load vs. Current for 36 and 48 Vdc actuators

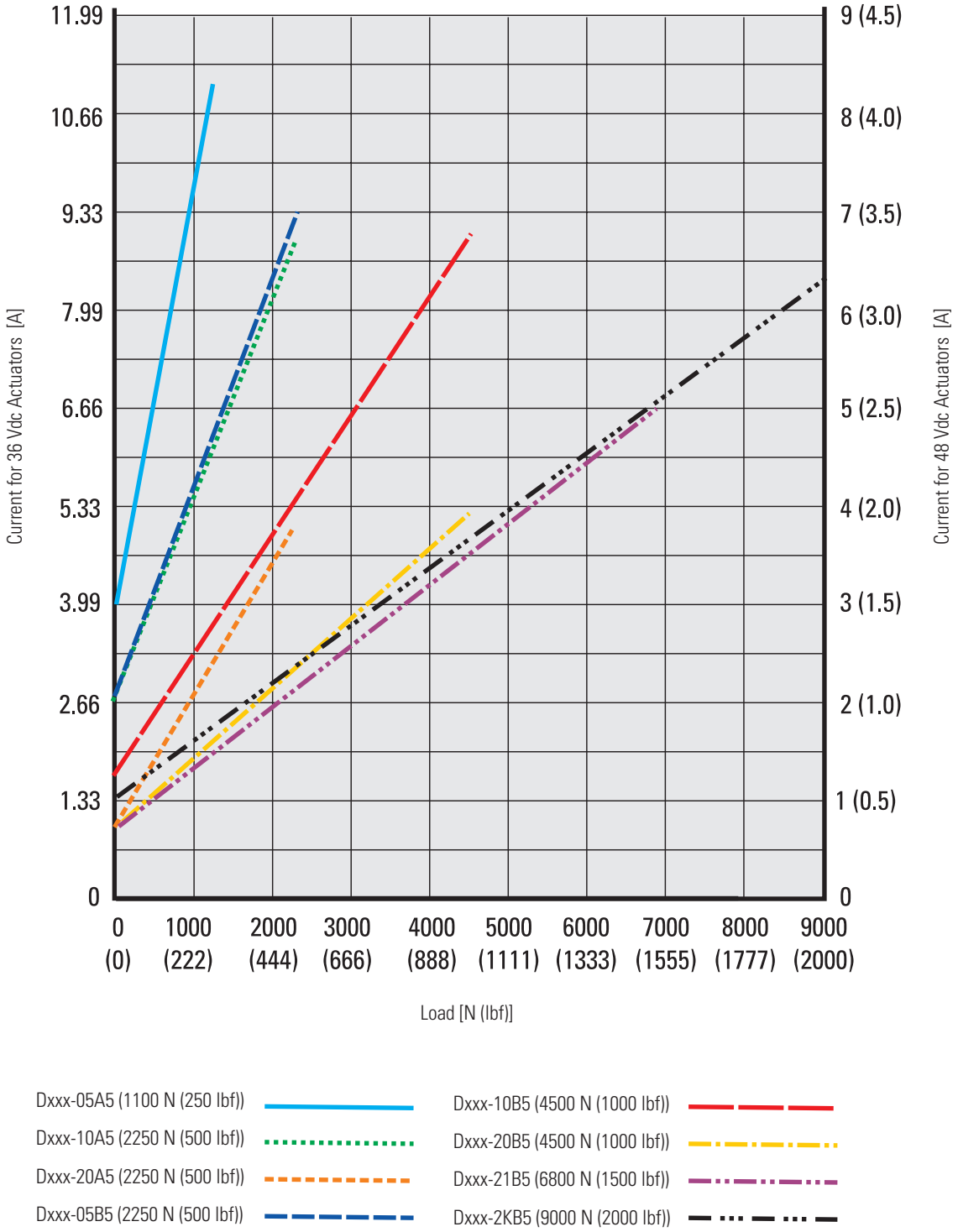

Electrak® GX DC – Ordering Key

Ordering Key

1	2	3	4	5	6	7	8	9
D12C	**05A5-**	**02**	**M0**	**N**	**N**	**-D**	**E**	**E**

1. Model, input voltage and CE compliance
D12C = Electrak GX, 12 Vdc, CE compliant
D24C = Electrak GX, 24 Vdc, CE compliant
D36C = Electrak GX, 36 Vdc, CE compliant
D48C = Electrak GX, 48 Vdc, CE compliant
D12N = Electrak GX, 12 Vdc, not CE compliant
D24N = Electrak GX, 24 Vdc, not CE compliant
D36N = Electrak GX, 36 Vdc, not CE compliant
D48N = Electrak GX, 48 Vdc, not CE compliant
D90N = Electrak GX, 90 Vdc, not CE compliant

2. Dynamic load capacity, screw type and maximum speed
05A5 - = 1100 N, acme, 54 mm/s
10A5 - = 2250 N, acme, 30 mm/s
20A5 - = 2250 N, acme, 15 mm/s
05B5 - = 2250 N, ball, 61 mm/s
10B5 - = 4500 N, ball, 30 mm/s
20B5 - = 4500 N, ball, 15 mm/s
21B5 - = 6800 N, ball, 15 mm/s (1)
2KB5 - = 9000 N, ball, 9 mm/s (2)

3. Ordering stroke length
02 = 2 inch (50.8 mm)
04 = 4 inch (101.6 mm)
06 = 6 inch (152.4 mm)
08 = 8 inch (203.2 mm)
10 = 10 inch (254.0 mm)
12 = 12 inch (304.8 mm)
14 = 14 inch (355.6 mm)
16 = 16 inch (406.4 mm)
18 = 18 inch (457.2 mm)
20 = 20 inch (508.0 mm)
22 = 22 inch (558.8 mm)
24 = 24 inch (609.6 mm)

4. Rear adapter hole orientation
M0 = adapter at 0° (standard)
M3 = adapter at 90° (3)

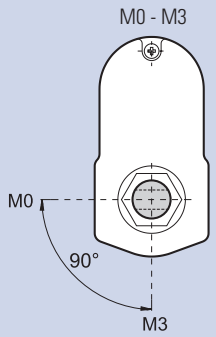

5. Ingress protection rating
N = IP66
K = IP66 and IP69K

6. Options
N = no option
P = potentiometer feedback
H = manual override

Dimensions for manual override option

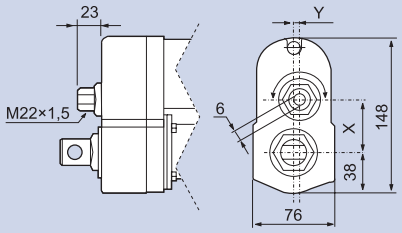

Model	X	Y
DxxxO5A(B)5-	49.6	0.0
Dxxx10A(B)5-	43.3	5.2
Dxxx20(21, 2K)A(B)5-	38.9	0.0

7. Connector option
-A = AMP terminal 42098-2, house 180908-5
-B = Packard Electric 56 Series
-D = no connector (flying leads)

8. Front adapter option
E = cross hole for 0.5 inch pin
F = forked cross hole for 0.5 inch pin
G = 1/2-20 UNF 2B female thread
K = cross hole for 10 mm pin
M = cross hole for 12 mm pin
N = forked cross hole for 12 mm pin
P = M12 female thread

9. Rear adapter option
E = cross hole for 0.5 inch pin
K = cross hole for 10 mm pin
M = cross hole for 12 mm pin

(1) 21B5 not possible with strokes above 20 inch
(2) 2KB5 not possible for strokes above 12 inch
(3) Not possible with option manual override

Electrak GX DC – Electrical Connections

Without Option

Actuator supply voltage	[Vdc]
D12x	12
D24x	24
D36x	36
D48x	48
D90N	90

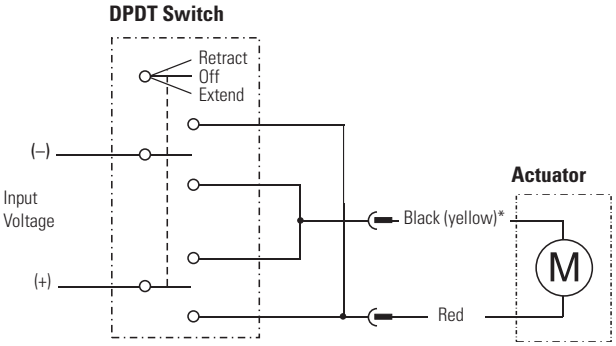

* Lead can be black or yellow

Connect the red lead to positive and black (yellow)* to negative to extend the actuator. Change polarity to retract the actuator.

Option Potentiometer

Actuator supply voltage	[Vdc]	
D12x		12
D24x		24
D36x		36
D48x		48
D90N		90
Potentiometer type		wirewound
Potentiometer max. input voltage	[Vdc]	32
Potentiometer max. power	[W]	2
Potentiometer linearity	[%]	± 0.25
Potentiometer output resolution	[ohm/mm]	
2 - 10 inch stroke		39
11 - 20 inch stroke		20
21 - 24 inch stroke		10

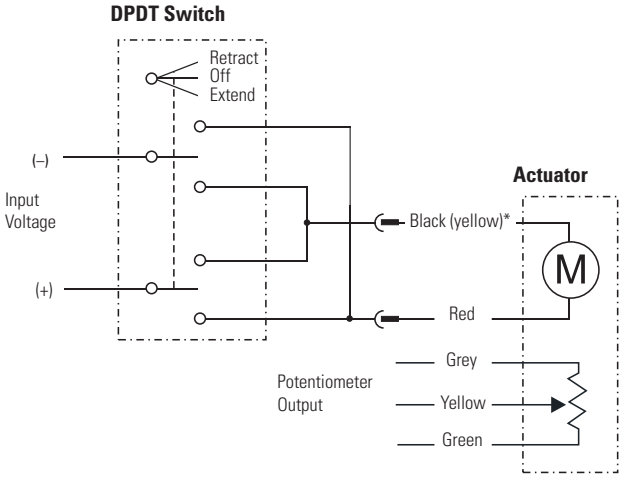

* Lead can be black or yellow

Connect the red lead to positive and black (yellow)* to negative to extend the actuator. Change polarity to retract the actuator. The potentiometer output cable has 0 ohm between grey and yellow leads when the actuator is fully extended.

Electrak® GX DC – Accessories

Mounting Pin Kits

Designation	A [mm(in)]	Part Number
Mounting pins (pair)	12.7 (0.5)	D603 028

The mounting pins are used in the rear and front adapter holes of the actuator. The pins have a groove in each end so that it can be secured with snap rings.

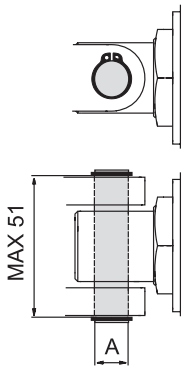

Dimensions
mm

Mating Connectors

Designation	Part Number
North American mating connector kit	9100-448-001
Rest of the world mating connector kit	LA100B9P1

The mating connector kit consist of the necessary connector parts required to be able to connect to the connector on the actuator wires.

Notes

Electrak® GX AC – Technical Features

Standard Features

- Robust and reliable
- 1 × 115, 1 × 230 or 3 × 400 Vac as standard input voltages
- Acme and ball screw models
- Static load up to 18 kN (4000 lbf)
- Dynamic load up to 9 kN (2000 lbf)
- Stroke up to 24 in (609 mm)
- Speed up to 61 mm/s (2.4 in/s)
- Protection class static IP45
- Overload clutch for mid and end of stroke protection
- Anti coast brake
- Motor with thermal switch
- Maintenance free

General Specifications

Screw type	acme or ball
Nut type Axxx-xxA (acme screw) Axxx-xxB (ball screw)	 self locking lead nut load lock ball nut
Manual override	no (optional)
Anti-rotation	no
Static load holding brake acme screw models ball screw models	 no (self locking) yes
Safety features	overload clutch motor auto reset thermal switch
Anti coast brake	yes
Electrical connections no potentiometer option with potentiometer option	 cable with flying leads 2 x cable with flying leads
Compliances	CE, UKCA
Certificates	UL, CSA

Optional Mechanical Features

Variety of front and rear adapters
Manual override

Optional Electrical Features

Potentiometer feedback

Electrak GX AC – Technical Specifications

Mechanical Specifications

Max. static load [1]	[N (lbf)]	
Axx-xxA (acme screw)		11350 (2500)
Axx-xxB (ball screw)		18000 (4000)
Max. dynamic load (Fx)	[N (lbf)]	
A12(22)C-05A5 [2]		1100 (250)
A12(22)C-10A5		2250 (500)
A42C-10A5		1100 (250)
A12(22)C-20A5		2250 (500)
A42C-20A5		1100 (250)
A12(22)C-05B5		2250 (500)
A42C-05B5		1100 (250)
A12(22)C-10B5		4500 (1000)
A42C-10B5		2250 (500)
A12(22)C-20B5		4500 (1000)
A42C-20B5		2250 (500)
A12(22)C-21B5 [2]		6800 (1500)
A12(22)C-2KB5 [2]		9000 (2000)
Speed @ no load/max. load	[mm/s (in/s)]	
AxxC-05A5 [2]		54/32 (2.10/1.20)
AxxC-10A5		30/18 (1.20/0.71)
AxxC-20A5		15/12 (0.67/0.47)
AxxC-05B5		61/37 (2.40/1.40)
AxxC-10B5		30/18 (1.20/0.71)
AxxC-20B5		15/12 (0.60/0.47)
AxxC-21B5 [2]		15/11 (0.60/043)
AxxC-2KB5 [2]		15/9 (0.60/0.35)
Min. ordering stroke (S) length	[in]	6
Max. ordering stroke (S) length [3][4][5]	[in]	24
Ordering stroke length increments	[in]	2
Operating temperature limits	[°C (F)]	- 25 – 65 (- 15 – 150)
Max. on time	[s]	45
Full load duty cycle @ 25 °C (77 °F)	[%]	25
End play, maximum	[mm (in)]	1.0 (0.04)
Restraining torque	[Nm (lbf-in)]	11.3 (100)
Protection class - static		IP54
Salt spray resistance	[h]	96

(1) Max. static load at fully retracted stroke
(2) Not possible with supply voltage 3 × 400 Vac
(3) 2KB5 not possible for strokes above 12 inch
(4) 21B5 not possible for strokes above 20 inch
(5) For other strokes, contact customer support

Electrical Specifications

Available input voltages [1]	[Vac]	1 × 115 [2] 1 × 230 [2] 3 × 400
Input voltage tolerance	[%]	± 10
Current draw @ no load/max. load	[A]	
A12C-05A5		1.2/2.8
A12C-10A5		1.2/2.8
A12C-20A5		0.8/2.2
A12C-05B5		1.0/2.8
A12C-10B5		1.0/2.8
A12C-20B5		1.0/2.4
A12C-21B5		0.8/2.8
A12C-2KB5		0.8/3.7
A22C-05A5		0.6/1.6
A22C-10A5		0.6/1.6
A22C-20A5		0.4/1.5
A22C-05B5		0.5/1.3
A22C-10B5		0.5/1.3
A22C-20B5		0.5/1.4
A22C-21B5		0.4/1.6
A22C-2KB5		0.4/1.8
A42C-05A5		not possible
A42C-10A5		0.35/0.7
A42C-20A5		0.30/0.7
A42C-05B5		0.45/0.7
A42C-10B5		0.45/0.7
A42C-20B5		0.45/0.7
A42C-21B5		not possible
A42C-2KB5		not possible
Motor cable length	[mm (in)]	600 (24)
Motor cable diameter	[mm (in)]	10 (0.4)
Motor cable leads cross section	[mm^2 (AWG)]	1.5 (16)
Potentiometer cable length [3]	[mm (in)]	500 (20)
Potentiometer cable diameter [3]	[mm (in)]	9 (0.35)
Pot. cable leads cross section [3]	[mm^2 (AWG)]	1.5 (16)

(1) For other input voltages - contact customer support.
(2) Capacitor required to run the actuator.
1 × 115 Vac = 35 µF, p/n 9200-448-002
1 × 230 Vac = 10 µF, p/n 9200-448-003
(3) Potentiometer is optional

Electrak® GX AC – Dimensions

Dimensions	Projection
mm [inch]	

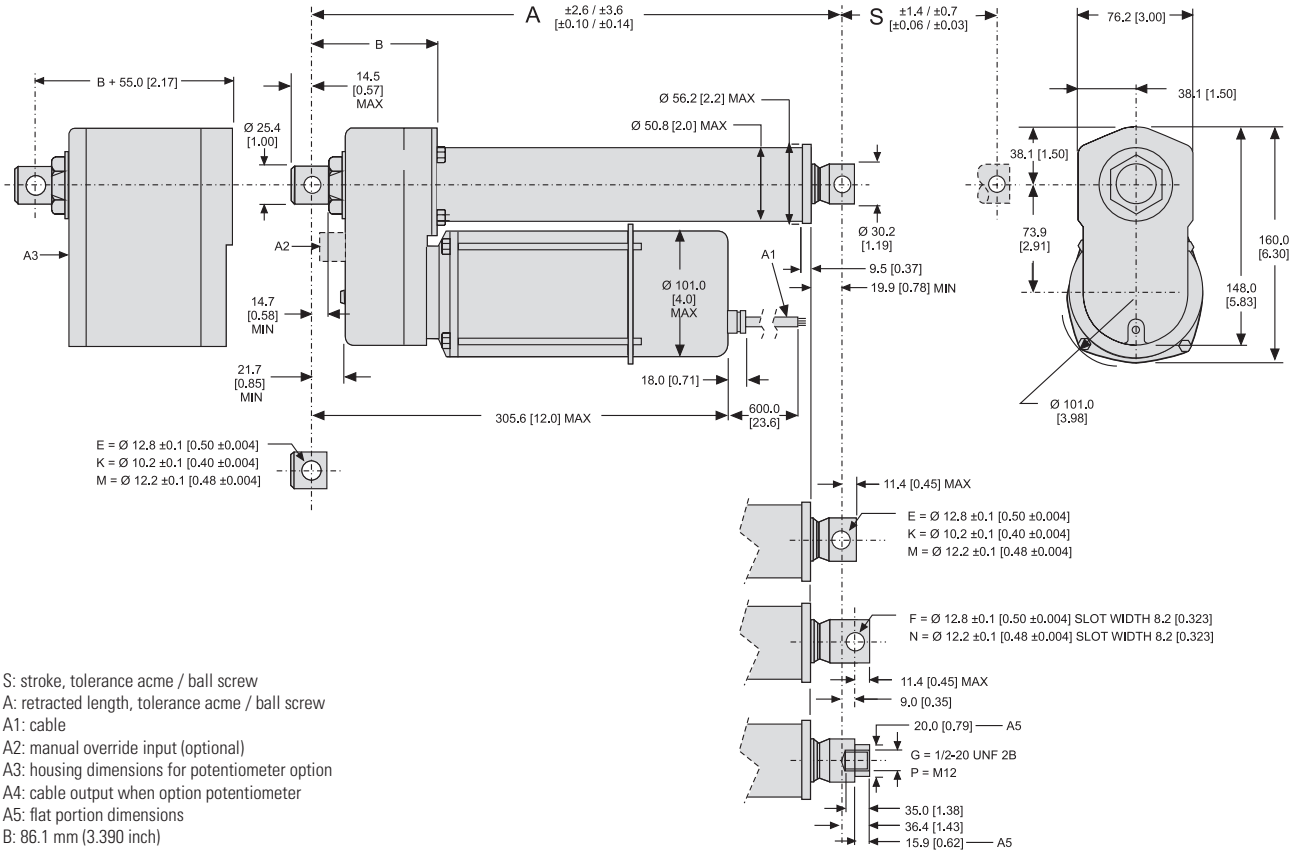

S: stroke, tolerance acme / ball screw
A: retracted length, tolerance acme / ball screw
A1: cable
A2: manual override input (optional)
A3: housing dimensions for potentiometer option
A4: cable output when option potentiometer
A5: flat portion dimensions
B: 86.1 mm (3.390 inch)

Stroke, Retracted Length and Weight Relationships

Ordering stroke (S)	[in]	6	8	10	12	14	16	18	20	22	24
Retracted length, acme screw models (A)	[mm]	312.9	363.7	414.5	465.3	583.7	634.5	685.3	736.1	786.9	837.7
	[in]	12.32	14.32	16.32	18.32	22.98	24.98	26.98	28.98	30.98	32.98
Retracted length, ball screw models (A)	[mm]	353.1	403.9	454.7	505.5	623.6	674.4	725.2	776.0	826.8	877.6
	[in]	13.90	15.90	17.90	19.90	24.55	26.55	28.55	30.55	32.55	34.55
Add on length for option potentiometer	[mm]	55.0									
	[in]	2.17									
Weight, acme screw models	[kg]	6.2	6.4	6.6	6.8	7.0	7.2	7.4	7.6	7.8	7.9
	[lbs]	13.6	14.1	14.5	15.0	15.4	15.8	16.3	16.7	17.1	17.4
Weight, ball screw models	[kg]	6.8	7.0	7.2	7.4	7.6	7.8	8.0	8.2	8.4	8.5
	[lbs]	15.0	15.4	15.8	16.3	16.7	17.1	17.6	18.0	18.5	38.3
Add on weight for option potentiometer	[kg]	1.30									
	[lbs]	2.86									

Electrak GX AC – Performance Diagrams

Load vs. Speed

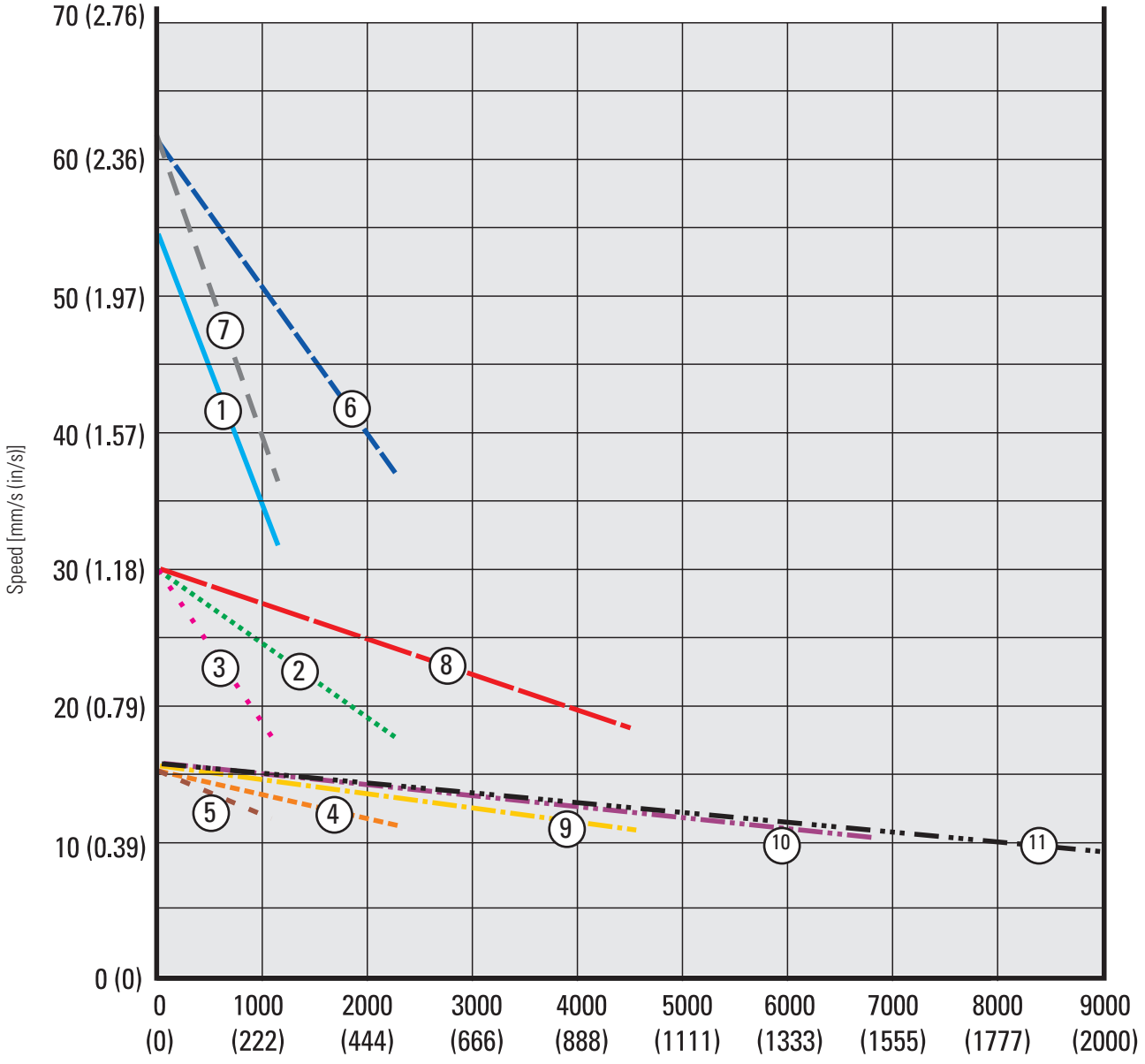

1. Axxx-05A5 (1100 N (250 lbf))
2. A12(22)x-10A5 (2250 N (500 lbf) A42x-10B5 (2250 N (500 lbf))
3. A42x-10A5 (1100 N (250 lbf))
4. A12(22)x-20A5 (2250 N (500 lbf)) 42x-20B5 (2250 N (500 lbf)
5. A42x-20A5 (1100 N (500 lbf))
6. A12(22)x-05B5 (2250 N (500 lbf))
7. A42x-05B5 (1100 N (250 lbf))
8. A12(22)x-10B5 (4500 N (1000 lbf))
9. A12(22)x-20B5 (4500 N (1000 lbf))
10. Axxx-21B5 (6800 N (1500 lbf))
11 Axxx-2KB5 (9000 N (2000 lbf))

Electrak® GX AC – Performance Diagrams

Load vs. Current for 1 × 115 and 1 × 230 Vac actuators

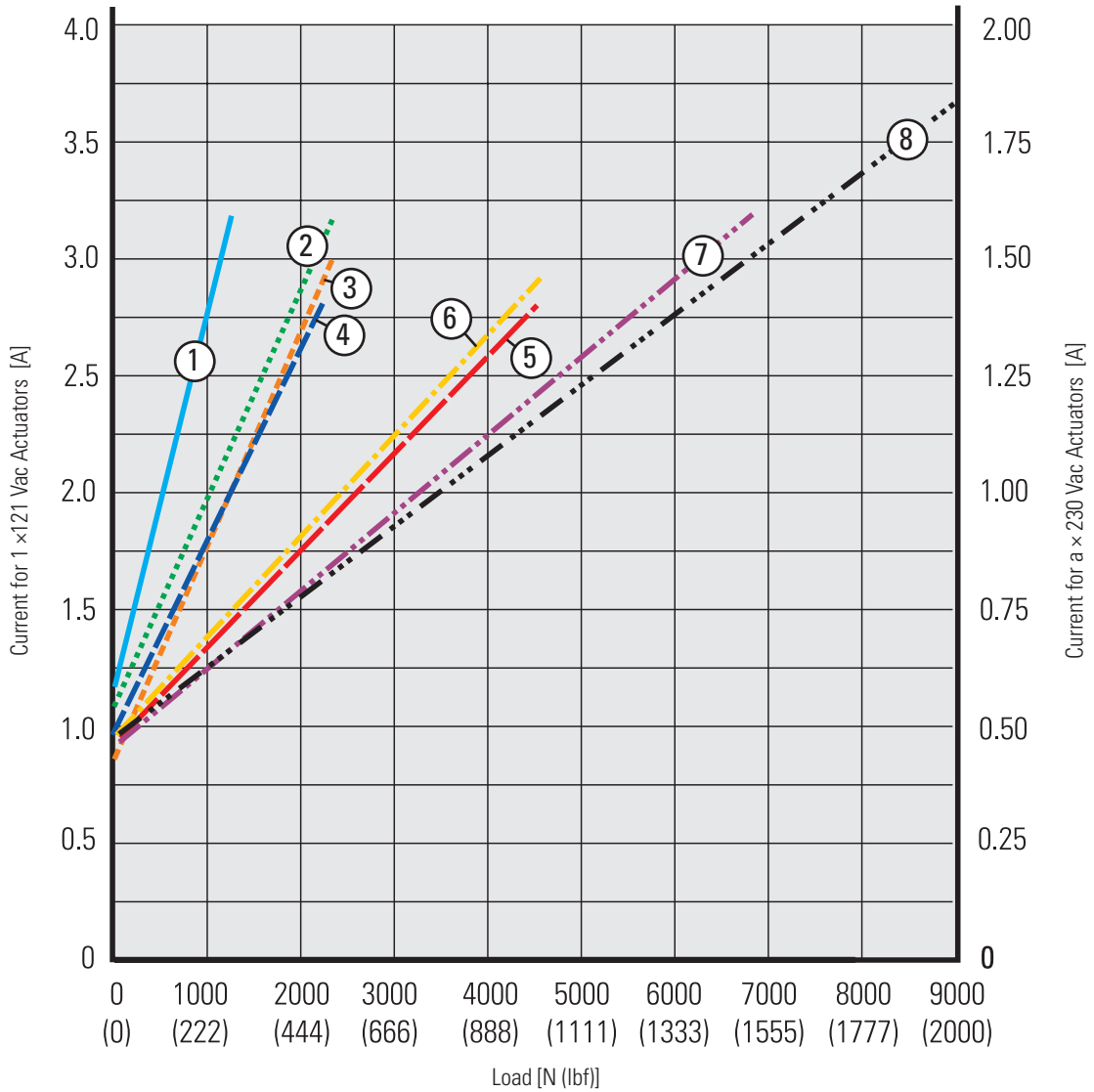

1. A12(22)x-05A5 (1100 N (250 lbf))
2. A12(22)x-10A5 (2250 N (500 lbf))
3. A12(22)x-20A5 (2250 N (500 lbf))
4. A12(22)x-05B5 (2250 N (500 lbf))
5. A12(22)x-10B5 (4500 N (1000 lbf))
6. A12(22)x-20B5 (4500 N (1000 lbf))
7.A12(22)x21B5 (6800 N (1500 lbf))
8. A12(22)x-2KB5 (9000 N (2000 lbf))

Load vs. Current for 3 × 400 Vac actuators

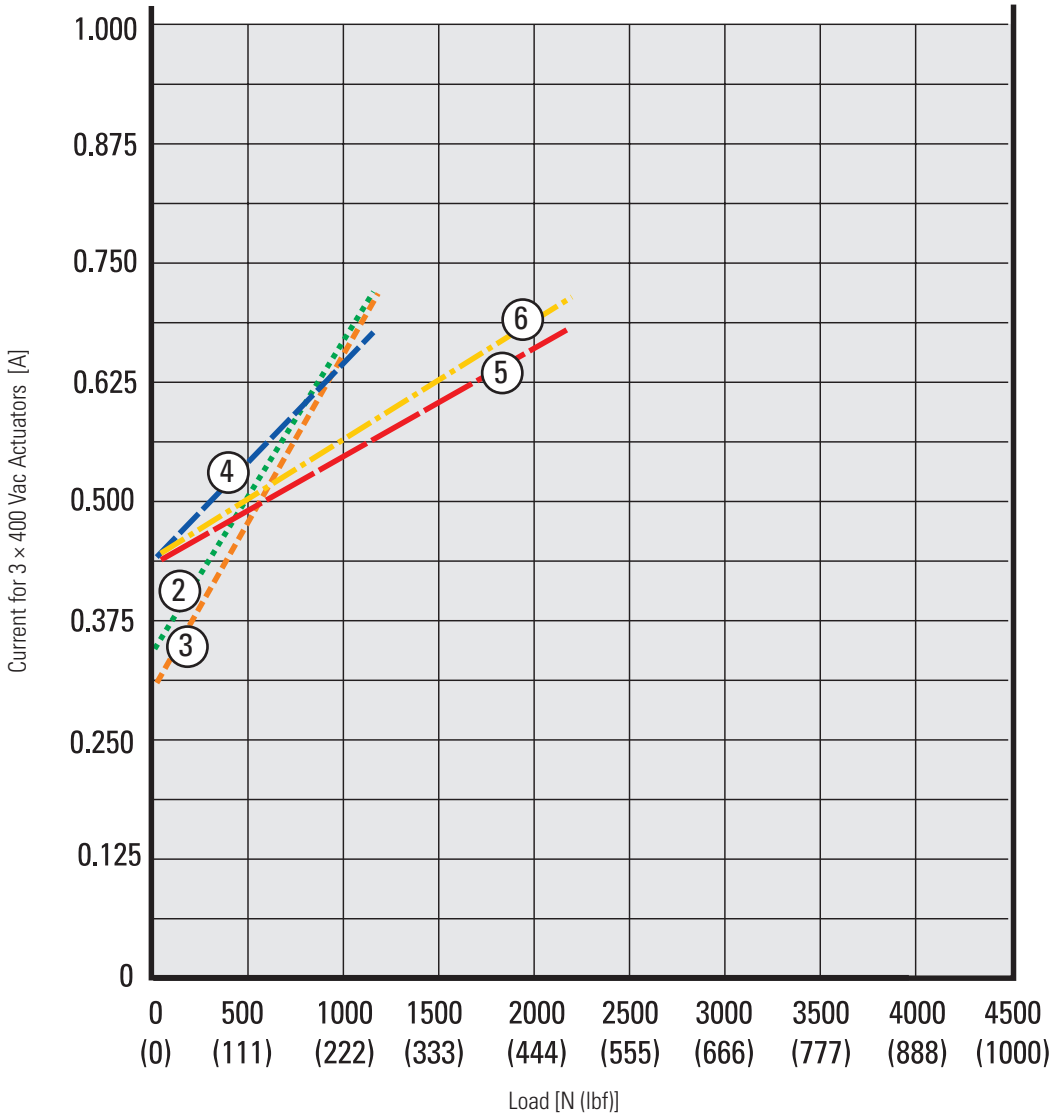

1. A42x-05A5 (1100 N (250 lbf)) not possible
2. A42x-10A5 (1100 N (250 lbf))
3. A42x-20A5 (1100 N (250 lbf))
4. A42x-05B5 (1100 N (250 lbf))
5. A42x-10B5 (2250 N (500 lbf))
6. A42x-20B5 (2250 N (500 lbf))
7. A42x-21B5 (6800 N (1500 lbf)) not possible
8. A42x-2KB5 (9000 N (2000 lbf)) not possible

Electrak® GX AC – Ordering Key

Ordering Key

1	2	3	4	5	6	7	8
A12C05A5-	**06**	**M0**	**B**	**N**	**-D**	**E**	**E**

1. Model, input voltage, dynamic load capacity, screw type, maximum speed

A12C05A5- = Electrak GX, 1 × 115 Vac, 1100 N, acme, 54 mm/s
A12C10A5- = Electrak GX, 1 × 115 Vac, 2250 N, acme, 30 mm/s
A12C20A5- = Electrak GX, 1 × 115 Vac, 2250 N, acme, 15 mm/s
A12C05B5- = Electrak GX, 1 × 115 Vac, 2250 N, ball, 61 mm/s
A12C10B5- = Electrak GX, 1 × 115 Vac, 4500 N, ball, 30 mm/s
A12C20B5- = Electrak GX, 1 × 115 Vac, 4500 N, ball, 15 mm/s
A12C21B5- = Electrak GX, 1 × 115 Vac, 6800 N, ball, 15 mm/s (1)
A12C2KB5- = Electrak GX, 1 × 115 Vac, 9000 N, ball, 10 mm/s (2)
A22C05A5- = Electrak GX, 1 × 230 Vac, 1100 N, acme, 54 mm/s
A22C10A5- = Electrak GX, 1 × 230 Vac, 2250 N, acme, 30 mm/s
A22C20A5- = Electrak GX, 1 × 230 Vac, 2250 N, acme, 15 mm/s
A22C05B5- = Electrak GX, 1 × 230 Vac, 2250 N, ball, 61 mm/s
A22C10B5- = Electrak GX, 1 × 230 Vac, 4500 N, ball, 30 mm/s
A22C20B5- = Electrak GX, 1 × 230 Vac, 4500 N, ball, 15 mm/s
A22C21B5- = Electrak GX, 1 × 230 Vac, 6800 N, ball, 15 mm/s (1)
A22C2KB5- = Electrak GX, 1 × 230 Vac, 9000 N, ball, 10 mm/s (2)
A42C10A5- = Electrak GX, 3 × 400 Vac, 1100 N, acme, 30 mm/s
A42C20A5- = Electrak GX, 3 × 400 Vac, 1100 N, acme, 15 mm/s
A42C05B5- = Electrak GX, 3 × 400 Vac, 1100 N, ball, 61 mm/s
A42C10B5- = Electrak GX, 3 × 400 Vac, 2250 N, ball, 30 mm/s
A42C20B5- = Electrak GX, 3 × 400 Vac, 2250 N, ball, 15 mm/s

2. Ordering stroke length

06 = 6 inch (152.4 mm)
08 = 8 inch (203.2 mm)
10 = 10 inch (254.0 mm)
12 = 12 inch (304.8 mm)
14 = 14 inch (355.6 mm)
16 = 16 inch (406.4 mm)
18 = 18 inch (457.2 mm)
20 = 20 inch (508.0 mm)
22 = 22 inch (558.8 mm)
24 = 24 inch (609.6 mm)

3. Rear adapter hole orientation

M0 = adapter at 0° (standard)
M3 = adapter at 90° (3)

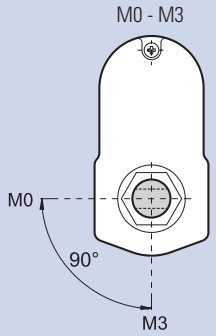

4. Ingress protection rating

B = IP45

5. Options

N = no option
P = potentiometer feedback
H = manual override

Dimensions for manual override option

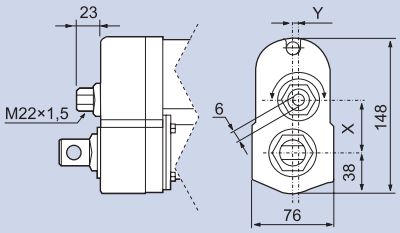

Model	X	Y
AxxxO5A(B)5-	49.6	0.0
Axxx10A(B)5-	43.3	5.2
Axxx20(21, 2K)A(B)5-	38.9	0.0

6. Connector option

-D = no connector (flying leads)

7. Front adapter option

E = cross hole for 0.5 inch pin
F = forked cross hole for 0.5 inch pin
G = 1/2-20 UNF 2B female thread
K = cross hole for 10 mm pin
M = cross hole for 12 mm pin
N = forked cross hole for 12 mm pin
P = M12 female thread

8. Rear adapter option

E = cross hole for 0.5 inch pin
K = cross hole for 10 mm pin
M = cross hole for 12 mm pin

(1) 21B5 not possible with strokes above 20 inch
(2) 2KB5 not possible for strokes above 12 inch
(3) Not possible with option manual override

Electrak GX AC – Electrical Connections

Input Voltage 115 or 230 Vac

Actuator supply voltage [Vac]	
A12	1 × 115
A22	1 × 230

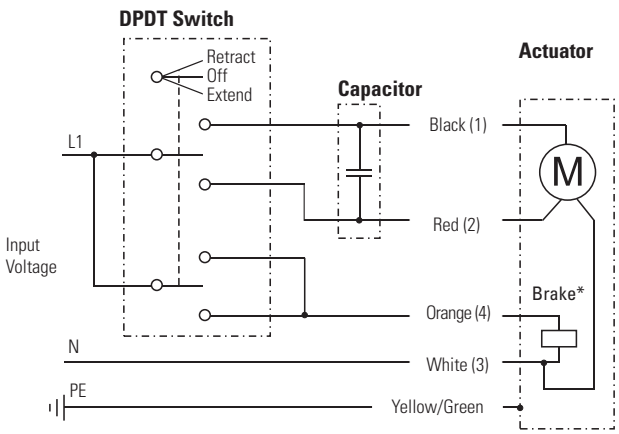

Leads can be either color or number marked. To be able to run the actuator, a capacitor must be connected between black (1) and red (2) leads. A 115 Vac actuator requires a 35 µF capacitor, while a 230 Vac actuator requires a 10 µF capacitor. See page 112 for ordering of capacitors. Connect black (1) lead to L1 and white (3) lead to N (neutral) to retract the actuator. Change L1 from lead black (1) to lead red (2) to extend the actuator. The anti-coast brake* must also be released during motion, which is done by connecting orange (4) lead to L1.

Input Voltage 400 Vac

Actuator supply voltage [Vac]	
A42	3 × 400

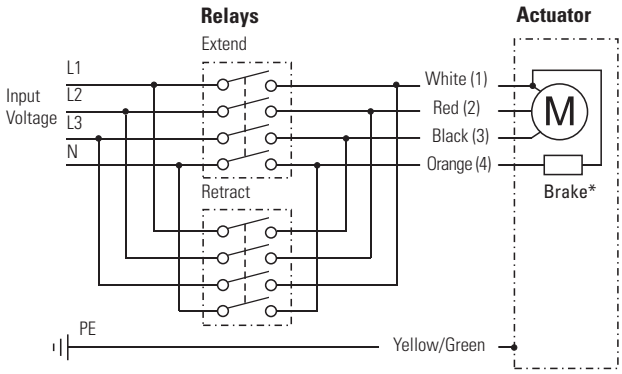

Leads can be either color or number marked. Connect white (1) lead to L1, red (2) lead to L2 and black (3) lead to L3 to extend the actuator. Change the places of white (2) lead and black (3) to retract the actuator. The anti-coast brake* must also be released during motion, which is done by connecting orange (4) lead to neutral (N).

Electrak® GX AC – Electrical Connections

Input Voltage 115 or 230 Vac + Option Potentiometer		
Actuator supply voltage A12 A22	[Vac]	 1 × 115 1 × 230
Potentiometer type		wire-wound
Potentiometer max. input voltage	[Vdc]	32
Potentiometer max. power	[W]	2
Potentiometer linearity	[%]	± 0.25
Potentiometer output resolution 2 - 10 inch stroke 11 - 20 inch stroke 21 - 24 inch stroke	[ohm/mm]	 39 20 10

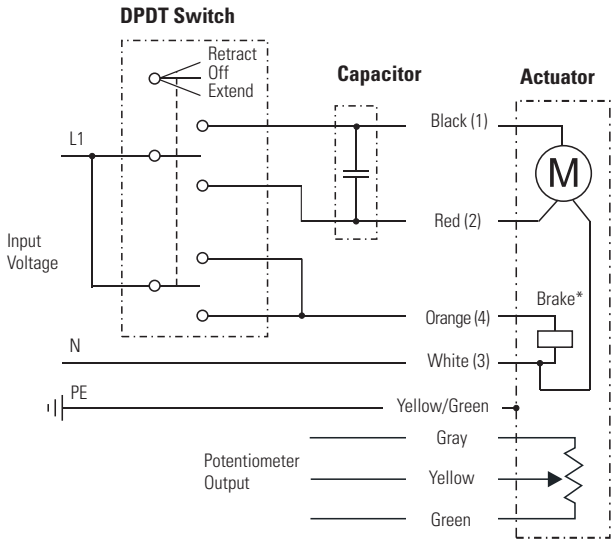

Leads can be either color or number marked. To be able to run the actuator, a capacitor must be connected between black (1) and red (2) leads. A 115 Vac actuator requires a 35 µF capacitor, while a 230 Vac actuator requires a 10 µF capacitor. See page 112 for ordering of capacitors. Connect black (1) lead to L1 and white (3) lead to N (neutral) to retract the actuator. Change L1 from lead black (1) to lead red (2) to extend the actuator. The anti-coast brake* must also be released during motion, which is done by connecting orange (4) lead to neutral (N). The potentiometer output cable has 0 ohm between gray and yellow leads when the actuator is fully extended.

Input Voltage 400 Vac + Option Potentiometer		
Actuator supply voltage A42	[Vac]	 3 × 400
Potentiometer type		wire-wound
Potentiometer max. input voltage	[Vdc]	32
Potentiometer max. power	[W]	2
Potentiometer linearity	[%]	± 0.25
Potentiometer output resolution 2 - 10 inch stroke 11 - 20 inch stroke 21 - 24 inch stroke	[ohm/mm]	 39 20 10

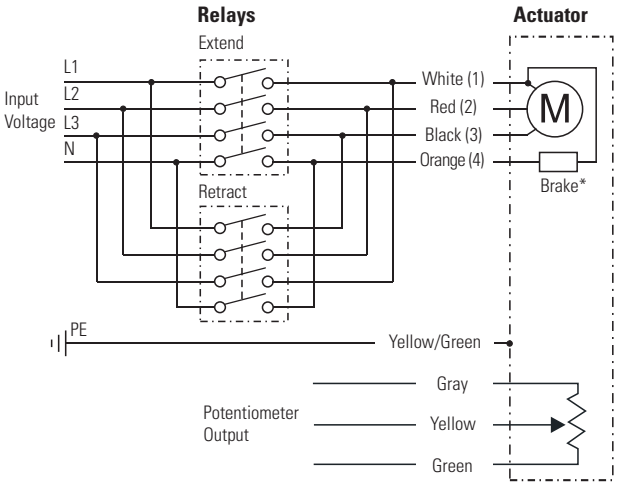

Leads can be either color or number marked. Connect white (1) lead to L1, red (2) lead to L2 and black (3) lead to L3 to extend the actuator. Change the places of white (2) lead and black (3) to retract the actuator. The anti-coast brake* must also be released during motion, which is done by connecting orange (4) lead to neutral (N). The potentiometer output cable has 0 ohm between gray and yellow leads when the actuator is fully extended.

Electrak® GX AC – Accessories

Mounting Pin Kits

Designation	A [mm(in)]	Part Number
Mounting pins (pair)	12.7 (0.5)	D603 028

The mounting pins are used in the rear and front adapter holes of the actuator. The pins have a groove in each end so that it can be secured with snap rings.

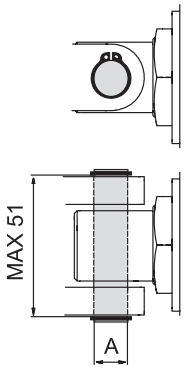

Dimensions
mm

Capacitor Kits

Designation	Actuator Supply Voltage	Part Number
Capacitor kit	115 Vac	9200-448-002
Capacitor kit	230 Vac	9200-448-003

All 230 and 115 Vac actuators require a capacitor to be wired between the windings to run. The capacitor is bought separately and mounted externally by the customer.

Notes

Electrak® LA14 – Technical Features

Standard Features

- Robust and reliable
- 12, 24 or 36 Vdc as standard input voltages
- Acme and ball screw models
- Static load up to 18 kN (4000 lbf)
- Dynamic load up to 6.8 kN (1500 lbf)
- Stroke up to 24 in
- Speed up to 61 mm/s (2.4 in/s)
- Protection class static IP65
- Overload clutch for mid and end of stroke protection
- Motor with thermal switch
- Corrosion free aluminium cover tube
- Anti-rotation mechanism
- T-slots in the cover tube for magnetic sensors
- Trunnion mounting possible
- Maintenance free

General Specifications

Screw type	acme or ball
Nut type Dxx-xxA (acme screw) Dxx-xxB (ball screw)	 self-locking lead nut load lock ball nut
Manual override	no (optional)
Anti-rotation	yes
Static load holding brake acme screw models ball screw models	 no (self-locking) yes
Safety features	overload clutch motor auto reset thermal switch
Electrical connections no potentiometer option with potentiometer option	 flying leads with or without connector cable with or without connector
Compliances	CE, UKCA

Optional Mechanical Features

Variety of front and rear adapters
Variety of rear adapter orientations
Manual override

Optional Electrical Features

Potentiometer feedback

Accessories

External slot-mounted limit switches
Mounting pin kits
Mounting pin bracket kits
Trunnions mounting kits

Compatible Controls

Contact customer support at www.thomsonlinear.com/cs

Electrak LA14 – Technical Specifications

Mechanical Specifications

Max. static load [1]	[N (lbf)]	
DAxx-xxA (acme screw)		11350 (2500)
DAxx-xxB (ball screw)		18000 (4000)
Max. dynamic load (Fx)	[N (lbf)]	
DAxx-05A65M		1100 (250)
DAxx-10A65M		2250 (500)
DAxx-20A65M		2250 (500)
DAxx-05B65M		2250 (500)
DAxx-10B65M		4500 (1000)
DAxx-20B65M		4500 (1000)
DAxx-21B65M		6800 (1500)
Speed @ no load/max. load	[mm/s (in/s)]	
DAxx-05A65M		54/32 (2.10/1.20)
DAxx-10A65M		30/18 (1.20/0.70)
DAxx-20A65M		15/12 (0.67/0.45)
DAxx-05B65M		61/37 (2.40/1.40)
DAxx-10B65M		30/19 (1.30/0.80)
DAxx-20B65M		15/12 0.60/0.45)
DAxx-21B65M		15/11 (0.60/043)
Min. ordering stroke (S) length	[mm]	50
Max. ordering stroke (S) length [2]	[mm]	600
Ordering stroke length increments	[mm]	50
Operating temperature limits	[°C (F)]	- 25 – 85 (- 15 – 185)
Full load duty cycle @ 25 °C (77 °F)	[%]	25
End play, maximum	[mm (in)]	1.0 (0.04)
Restraining torque	[Nm (lbf-in)]	0
Protection class - static		IP65
Salt spray resistance	[h]	96

(1) Max. static load at fully retracted stroke

Electrical Specifications

Available input voltages [1]	[Vdc]	12, 24, 36
Input voltage tolerance	[%]	± 10
Current draw @ no load/max. load [2]	[A]	
DA12-05A65M		12.0/34.0
DA12-10A65M		9.0/27.0
DA12-20A65M		8.0/15.0
DA12-05B65M		8.0/26.0
DA12-10B65M		5.0/26.0
DA12-20B65M		4.0/14.0
DA12-21B65M		4.0/19.0
DA24-05A65M		6.0/17.0
DA24-10A65M		4.5/13.5
DA24-20A65M		4.0/7.5
DA24-05B65M		4.0/13.0
DA24-10B65M		2.5/13.0
DA24-20B65M		2.0/7.0
DA24-21B65M		2.0/9.5
Flying leads length	[mm (in)]	165 (7.5)
Flying leads diameter	[mm (in)]	3 (0.12)
Flying leads cross section	[mm^2 (AWG)]	2 (14)
Cable length with option pot.	[mm (in)]	600 (24)
Cable diameter with option pot.	[mm (in)]	9 (0.35)
Cable leads cross section with option potentiometer	[mm^2 (AWG)]	
motor leads		2.5 (14)
potentiometer leads		1.5 (16)

(1) For other input voltages - contact customer support
(2) For current draw for 36 Vdc input voltage models - contact customer support

Electrak® LA14 – Dimensions

Dimensions	Projection
mm [inch]	

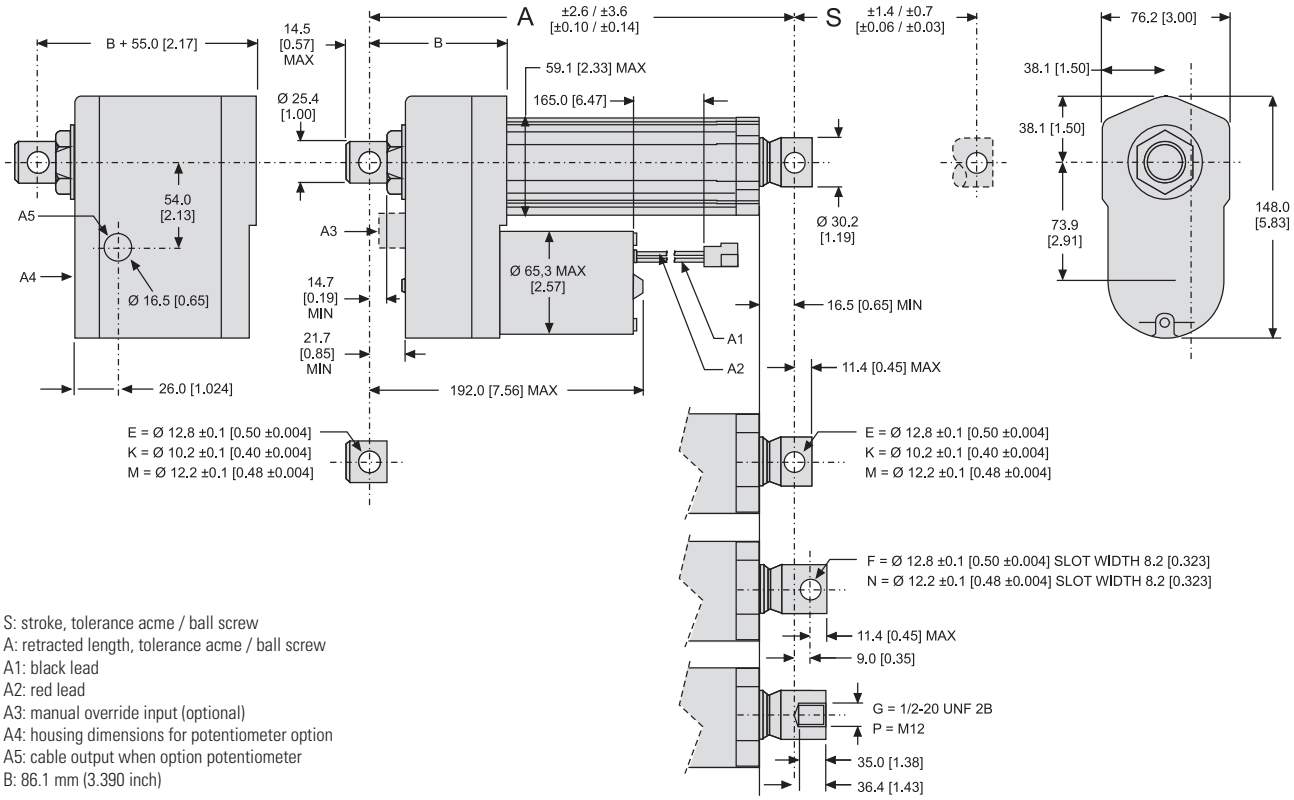

S: stroke, tolerance acme / ball screw
A: retracted length, tolerance acme / ball screw
A1: black lead
A2: red lead
A3: manual override input (optional)
A4: housing dimensions for potentiometer option
A5: cable output when option potentiometer
B: 86.1 mm (3.390 inch)

Stroke, Retracted Length and Weight Relationships

Ordering stroke (S)	[mm]	50	100	150	200	250	300	350	400	450	500	550	600
Retracted length, acme screw models (A)	[mm]	219.9	269.9	319.9	369.9	419.9	469.9	586.6	636.6	686.6	736.6	786.6	836.6
	[in]	8.86	10.62	12.59	14.56	16.53	18.50	23.09	25.06	27.03	29.00	30.97	32.94
Retracted length, ball screw models (A)	[mm]	269.6	319.6	369.6	419.6	469.6	519.6	623.4	673.4	723.5	773.4	823.4	873.4
	[in]	10.61	12.58	14.55	16.52	18.49	20.46	24.54	26.51	28.48	30.45	32.42	34.39
Add on length for option potentiometer	[mm]	55.0											
	[in]	2.17											
Weight, acme screw models	[kg]	4.5	4.7	4.9	5.1	5.3	5.5	5.8	6.0	6.2	6.4	6.6	6.8
	[lbs]	9.9	10.3	10.8	11.2	11.7	12.1	12.8	13.2	13.6	14.1	14.5	15.0
Weight, ball screw models	[kg]	5.3	5.5	5.7	5.9	6.1	6.3	6.6	6.8	7.0	7.2	7.4	7.6
	[lbs]	11.7	12.1	12.5	13.0	13.4	13.9	14.5	15.0	15.4	15.8	16.3	16.7
Add on weight for option potentiometer	[kg]	1.30											
	[lbs]	3.31											

Electrak LA14 – Performance Diagrams

Acme Screw Models
Speed and Current vs. Load

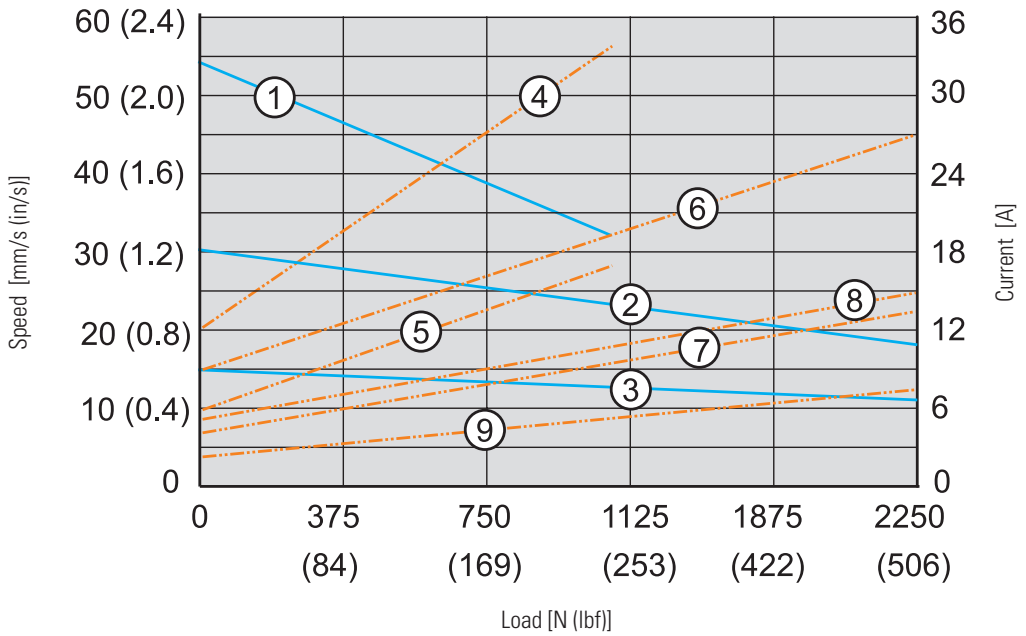

Speed
1: DAxx-05A65M
2: DAxx-10A65M
3: DAxx-20A65M

Current
4. DA12-05A65M
5: DA24-05A65M
6: DA12-10A65M
7: DA24-10A65M
8: DA12-20A65M
9: DA24-20A65M

Ball Screw Models
Speed and Current vs. Load

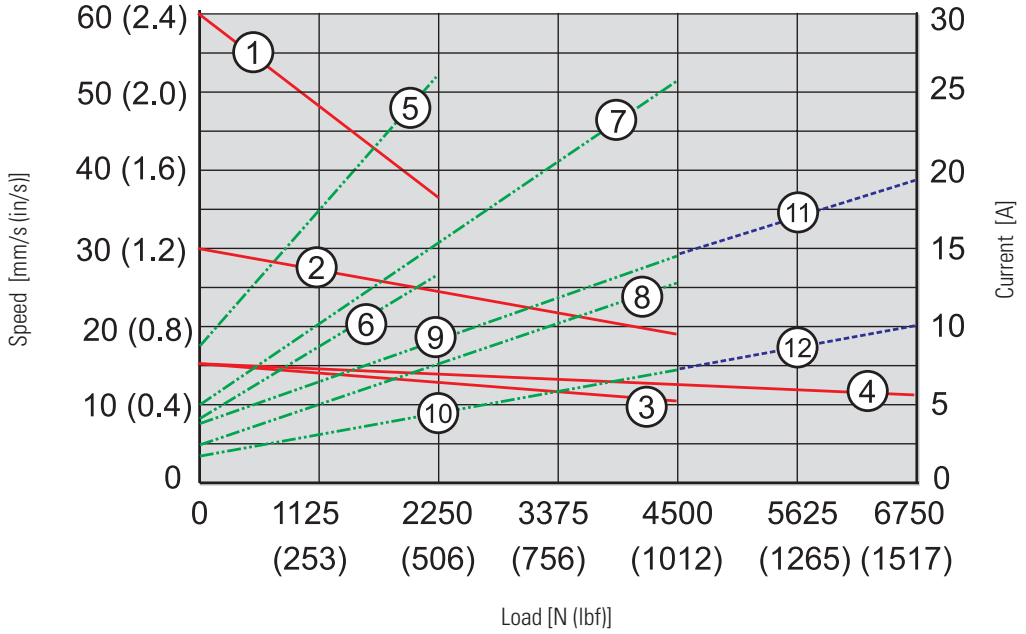

Speed
1: DAxx-05B65M
2: DAxx-10B65M
3: DAxx-20B65M
4: DAxx-21B65M

Current
5. DA12-05B65M
6: DA24-05B65M
7: DA12-10B65M
8: DA24-10B65M
9: DA12-20B65M
10: DA24-20B65M
11: DA12-21B65M
12: DA24-21B65M

Note: for current draw data for 36 Vdc input voltage models - contact customer support.

Electrak® LA14 – Ordering Key

Ordering Key

1	2	3	4	5	6	7	8
DA12-	**05A65M**	**10**	**M0**	**N**	**-A**	**F**	**M**

1. Model and input voltage
DA12- = Electrak LA14, 12 Vdc
DA24- = Electrak LA14, 24 Vdc
DA36- = Electrak LA14, 36 Vdc

2. Dynamic load capacity, screw type, maximum speed
05A65M = 1100 N, acme, 54 mm/s
10A65M = 2250 N, acme, 30 mm/s
20A65M = 2250 N, acme, 15 mm/s
05B65M = 2250 N, ball, 61 mm/s
10B65M = 4500 N, ball, 30 mm/s
20B65M = 4500 N, ball, 15 mm/s
21B65M = 6800 N, ball, 15 mm/s

3. Ordering stroke length
05 = 50 mm (1.97 in)
10 = 100 mm (3.94 in)
15 =150 mm (5.90 in)
20 = 200 mm (7.87 in)
25 = 250 mm (9.84 in)
30 = 300 mm (11.81 in)
35 = 350 mm (13.78 in)
40 = 400 mm (15.75 in)
45 = 450 mm (17.72 in)
50 = 500 mm (19.69 in)
55 = 550 mm (21.65 in)
60 = 600 mm (23.62 in)

4. Rear / front adapter hole position (1)
M0 = both adapters at 0° (standard position)
MF = both adapters at 90°

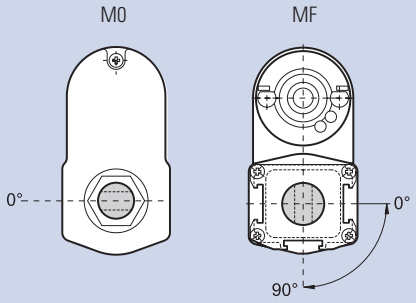

5. Options
N = no option
NPO = potentiometer feedback
NHW = manual override (1)

Dimensions for manual override option

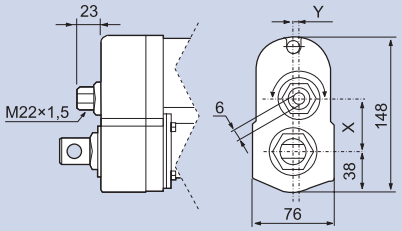

Model	X	Y
DAxx05A(B)65-	49.6	0.0
DAxx10A(B)65-	43.3	5.2
DAxx20(21)A(B)65-	38.9	0.0

6. Connector option
-A = AMP terminal 42098-2, house 180908-5
-B = Packard Electric 56 Series
-D = no connector (flying leads)

7. Front adapter option
E = cross hole for 0.5 inch pin
K = cross hole for 10 mm pin
M = cross hole for 12 mm pin

8. Rear adapter option
E = cross hole for 0.5 inch pin
K = cross hole for 10 mm pin
M = cross hole for 12 mm pin

(1) Only adapter position M0 possible with option manual override.

Electrak LA14 – Electrical Connections

Without Option

Actuator supply voltage	[Vdc]	
DA12		12
DA24		24
DA36		36

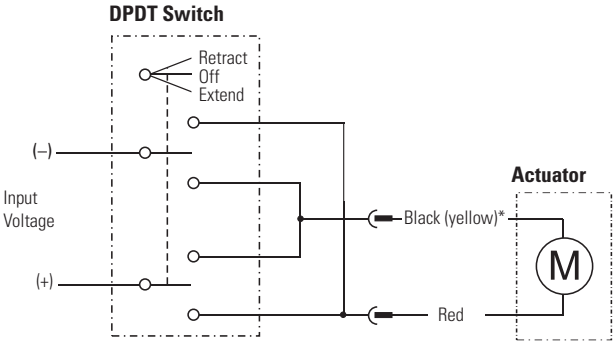

* Lead can be black or yellow

Connect the red lead to positive and black (yellow)* to negative to extend the actuator. Change polarity to retract the actuator.

Option Potentiometer

Actuator supply voltage	[Vdc]	
DA12		12
DA24		24
DA36		36
Potentiometer type		wire-wound
Potentiometer max. input voltage	[Vdc]	32
Potentiometer max. power	[W]	2
Potentiometer linearity	[%]	± 0.25
Potentiometer output resolution	[ohm/mm]	
50 - 255 mm stroke		39
256 - 510 mm stroke		20
511 - 600 mm stroke		10

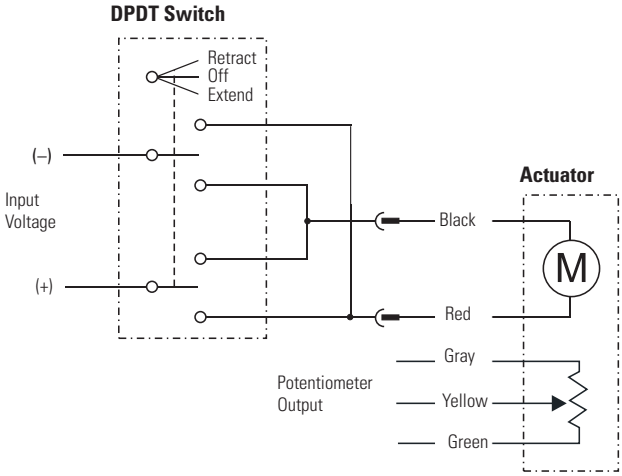

Connect the red lead to positive and black to negative to extend the actuator. Change polarity to retract the actuator. The potentiometer output cable has 0 ohm between gray and yellow leads when the actuator is fully extended.

Electrak® LA14 – Accessories

Mounting Pin Kits

Designation	A [mm (in)]	Part Number
Mounting pins (pair)	12 (0.47)	D603 023

The mounting pins are used in the rear and front adapter holes of the actuator. The pins have a groove in each end so that it can be secured with snap rings.

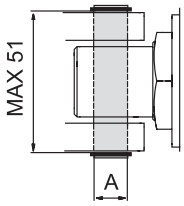

Dimensions
mm

Mating Connectors

Designation	Part Number
North American mating connector kit (connector option -B in the ordering key)	9100-448-001
Rest of the world mating connector kit (connector option -A in the ordering key)	LA100B9P1

The mating connector kit consist of the necessary connector parts required to be able to connect to the connector on the actuator wires.

Magnetic Sensor

Designation	Contact Type	Part Number
Magnetic sensor	normally open	D535 070
Magnetic sensor	normally closed	D535 071
Magnetic sensor	changing	D535 073

Specifications

Parameter		D535 070 D535 071	D535 073
Maximum power	[W]	10	10
Maximum voltage	[Vdc]	100	100
Maximum current	[A]	0,5	0,5
Maximum contact resistance	[ohm]	20	20
Lead cross section	[mm²]	2 × 0,14	3 × 0,14
Cable length	[mm]	3000	3000
Protection class		IP67	IP67

The magnetic sensor fits in to the T-slot running along three sides of the cover tube. The cable is moulded into the sensor.

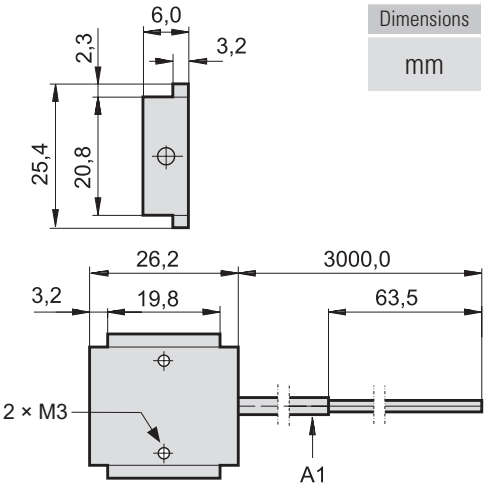

Dimensions
mm

A1: cable

Mounting Pin Bracket Kits

Designation	Part Number
Mounting pin brackets (pair)	D603 029

The mounting pin brackets are used to attach the front and rear adapter via a pair of mounting pins to the objects to which it is mounted. Note! one pair of brackets is needed per adapter as there must be a bracket on each side of the adapter.

Dimensions
mm

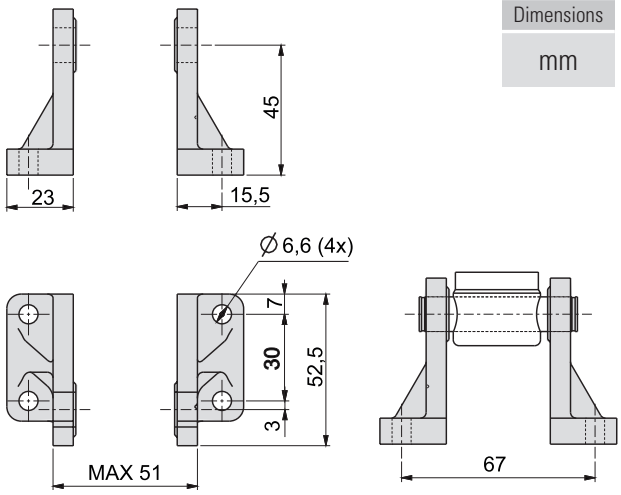

Trunnion Mounting Kits

Designation	Part Number
Trunnions (pair)	D603 022
Trunnion brackets (pair)	D603 030

The trunnions can be mounted to the T-slot running along the right and left side of the cover tube.

Trunnions

Dimensions
mm

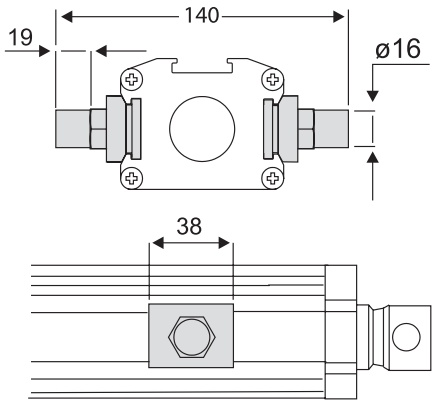

Trunnion Brackets

Dimensions
mm

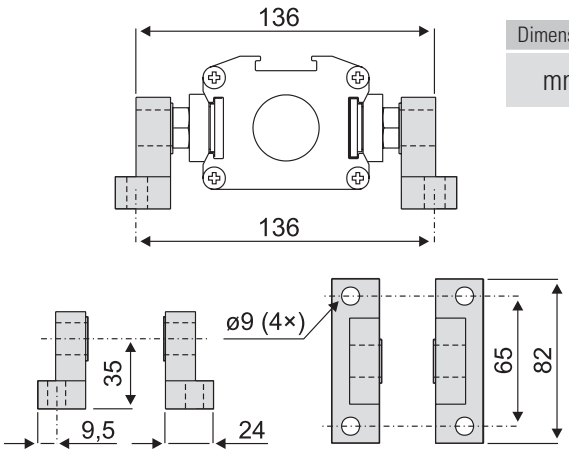

Electrak® LA24 – Technical Features

Standard Features

- Robust and reliable
- 1 × 230 or 3 × 400 Vac as standard input voltages
- Acme and ball screw models
- Static load up to 18 kN (4000 lbf)
- Dynamic load up to 4.5 kN (1000 lbf)
- Stroke up to 24 in
- Speed up to 61 mm/s (2.4 in/s)
- Protection class static IP45
- Overload clutch for mid and end of stroke protection
- Motor with thermal switch
- Corrosion free aluminium cover tube
- Anti-rotation mechanism
- T-slots in the cover tube for magnetic sensors
- Maintenance free

General Specifications

Screw type	acme or ball
Nut type Dxx-xxA (acme screw) Dxx-xxB (ball screw)	 self-locking lead nut load lock ball nut
Manual override	no (optional)
Anti-rotation	yes
Static load holding brake acme screw models ball screw models	 no (self-locking) yes
Safety features	overload clutch motor auto reset thermal switch
Electrical connections no potentiometer option with potentiometer option	 cable with flying leads 2 x cable with flying leads
Compliances	CE, UKCA
Certificates	UL, CSA

(1) Mating connector: 2973781 with terminal 2962573 (p/n 9100-448-001)

Optional Mechanical Features

- Variety of front and rear adapters
- Variety of rear adapter orientations
- Manual override

Optional Electrical Features

- Potentiometer feedback
- Anti-coast brake

Accessories

- External slot-mounted limit switches
- Mounting pin kits
- Mounting pin bracket kits
- Trunnions mounting kits
- Capacitors

Compatible Controls

Contact customer support at www.thomsonlinear.com/cs

Electrak LA24 – Technical Specifications

Mechanical Specifications

Max. static load [1]	[N (lbf)]	
Axx-xxA (acme screw)		11350 (2500)
Axx-xxB (ball screw)		18000 (4000)
Max. dynamic load (Fx)	[N (lbf)]	
AA12(22)-05A65M [2]		1100 (250)
AA12(22)-10A65M		2250 (500)
AA42-10A65M		1100 (250)
AA12(22)-20A65M		2250 (500)
AA42-20A65M		1100 (250)
AA12(22)-05B65M		2250 (500)
AA42-05B65M		1100 (250)
AA12(22)-10B65M		4500 (1000)
AA42-10B65M		2250 (500)
AA12(22)-20B65M		4500 (1000)
AA42-20B65M		2250 (500)
Speed @ no load/max. load	[mm/s (in/s)]	
AAxx-05A65M [2]		54/32 (2.10/1.20)
AAxx-10A65M		30/18 (1.20/0.70)
AAxx-20A65M		15/12 (0.67/0.45)
AAxx-05B65M		61/37 (2.40/1.40)
AAxx-10B65M		30/18 (1.30/0.71)
AAxx-20B65M		15/12 0.60/0.47)
Min. ordering stroke (S) length	[mm]	50
Max. ordering stroke (S) length	[mm]	600
Ordering stroke length increments	[mm]	50
Operating temperature limits	[°C (F)]	- 25 – 65 (- 15– 150)
Max. on time	[s]	45
Full load duty cycle @ 25 °C (77 °F)	[%]	25
End play, maximum	[mm (in)]	1.0 (0.04)
Restraining torque	[Nm (lbf-in)]	0
Protection class - static		IP45
Salt spray resistance	[h]	96

(1) Max. static load at fully retracted stroke
(2) Not possible with supply voltage 3 × 400 Vac

Electrical Specifications

Available input voltages [1]	[Vac]	1 × 230 [2] 3 × 400
Input voltage tolerance	[%]	± 10
Current draw @ no load/max. load	[A]	
AA22-05A65M		1.05/1.60
AA22-10A65M		0.80/160
AA22-20A65M		0.95/1.50
AA22-05B65M		0.90/1.40
AA22-10B65M		0.90/1.40
AA22-20B65M		0.90/1.40
AA42-10A65M		0.40/0.70
AA42-20A65M		0.30/0.45
AA42-05B65M		0.38/0.50
AA42-10B65M		0.38/0.50
AA42-20B65M		0.38/0.50
Motor cable length	[mm (in)]	600 (24)
Motor cable diameter	[mm (in)]	10 (0.4)
Motor cable leads cross section	[mm^2 (AWG)]	1.5 (16)
Potentiometer cable length [3]	[mm (in)]	500 (20)
Potentiometer cable diameter [3]	[mm (in)]	9 (0.35)
Pot. cable leads cross section [3]	[mm^2 (AWG)]	1.5 (16)

(1) For other input voltages - contact customer
(2) Capacitor required to run the actuator. 10 µF, p/n 9200-448-003
(3) Potentiometer is optional

Electrak® LA24 – Dimensions

Dimensions	Projection
mm [inch]	

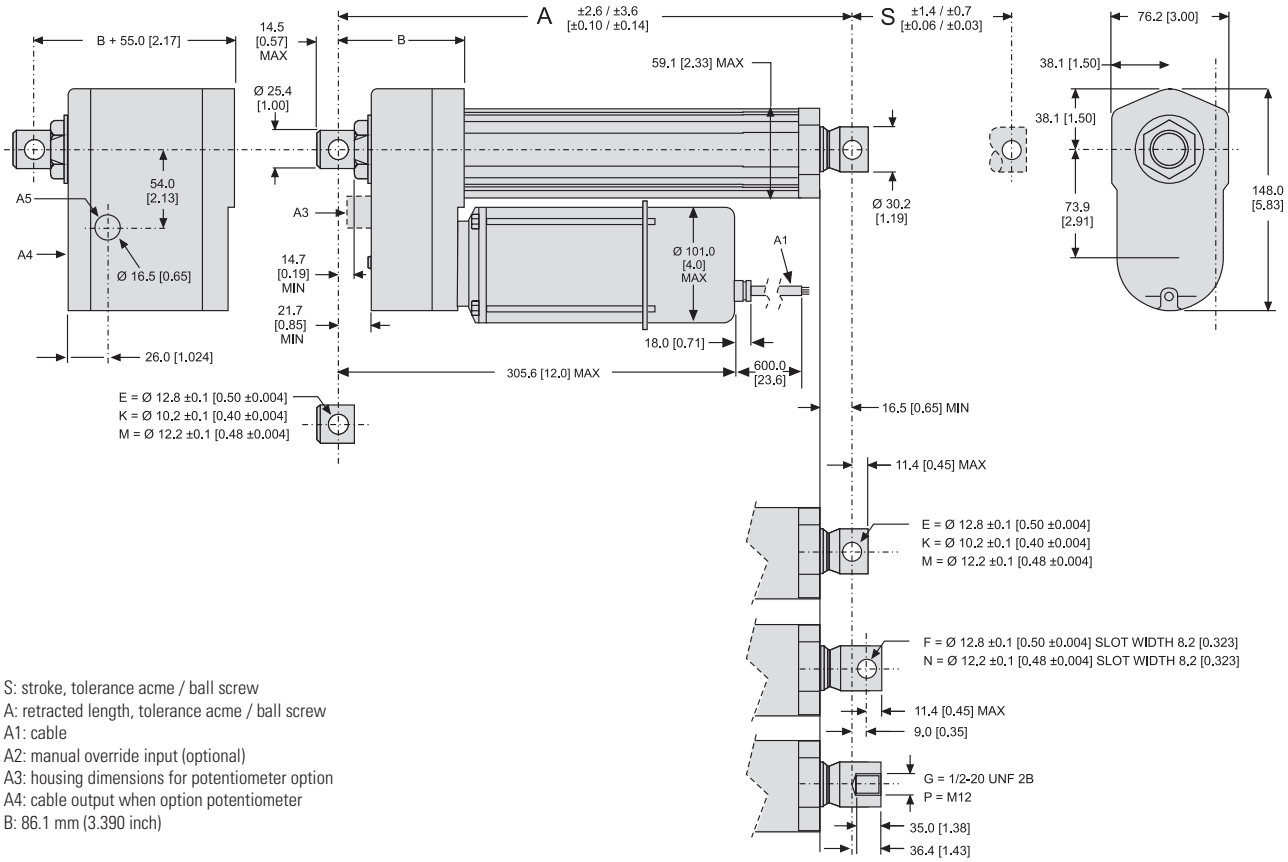

S: stroke, tolerance acme / ball screw
A: retracted length, tolerance acme / ball screw
A1: cable
A2: manual override input (optional)
A3: housing dimensions for potentiometer option
A4: cable output when option potentiometer
B: 86.1 mm (3.390 inch)

Stroke, Retracted Length and Weight Relationships

Ordering stroke (S)	[mm]	50	100	150	200	250	300	350	400	450	500	550	600
Retracted length, acme screw models (A)	[mm]	219.9	269.9	319.9	369.9	419.9	469.9	586.6	636.6	686.6	736.6	786.6	836.6
	[in]	8.86	10.62	12.59	14.56	16.53	18.50	23.09	25.06	27.03	29.00	30.97	32.94
Retracted length, ball screw models (A)	[mm]	269.6	319.6	369.6	419.6	469.6	519.6	623.4	673.4	723.5	773.4	823.4	873.4
	[in]	10.61	12.58	14.55	16.52	18.49	20.46	24.54	26.51	28.48	30.45	32.42	34.39
Add on length for option potentiometer	[mm]	55.0											
	[in]	2.17											
Weight, acme screw models	[kg]	6.0	6.2	6.4	6.6	6.8	7.0	7.3	7.5	7.7	7.9	8.1	8.3
	[lbs]	13.2	13.6	14.1	14.5	15.0	15.4	16.1	16.5	16.9	17.4	17.8	18.3
Weight, ball screw models	[kg]	6.8	7.0	7.2	7.4	7.6	7.8	8.1	8.3	8.5	8.7	8.9	9.1
	[lbs]	15.0	15.4	15.8	16.3	16.7	17.2	17.8	18.3	18.7	19.1	19.6	20.0
Add on weight for option potentiometer	[kg]	1.30											
	[lbs]	3.31											

Electrak LA24 – Performance Diagrams

Acme Screw Models
Speed and Current vs. Load

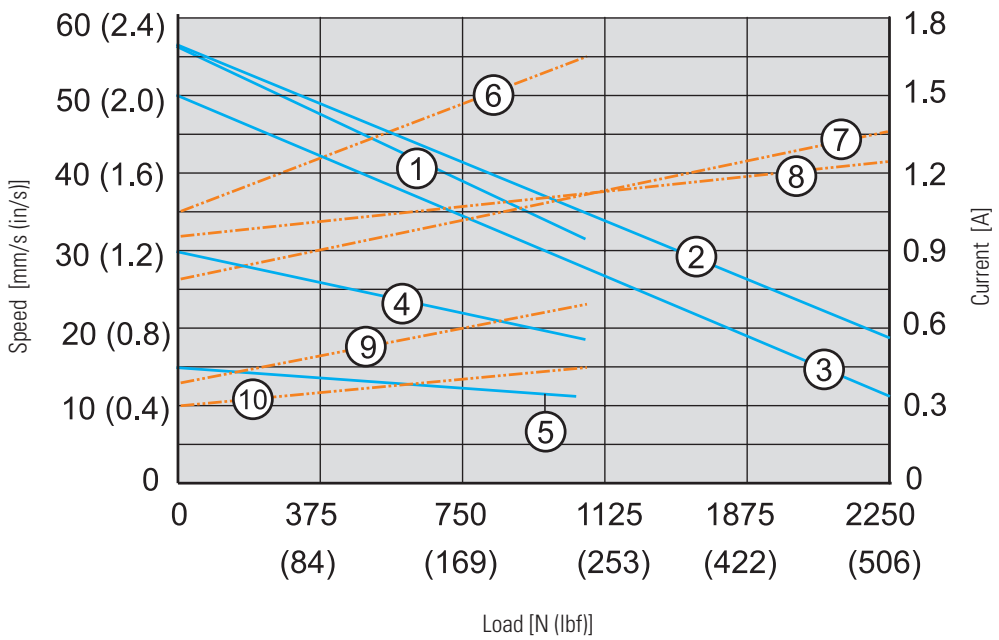

Speed

1: AA22-05A65M
2: AA22-10A65M
3: AA22-20A65M
4: AA42-10A65M
5: AA42-20A65M

Current

6: AA22-05A65M
7: AA22-10A65M
8 : AA42-20A65M
9: AA42-10A65M
10: AA42-20A65M

Ball Screw Models
Speed and Current vs. Load

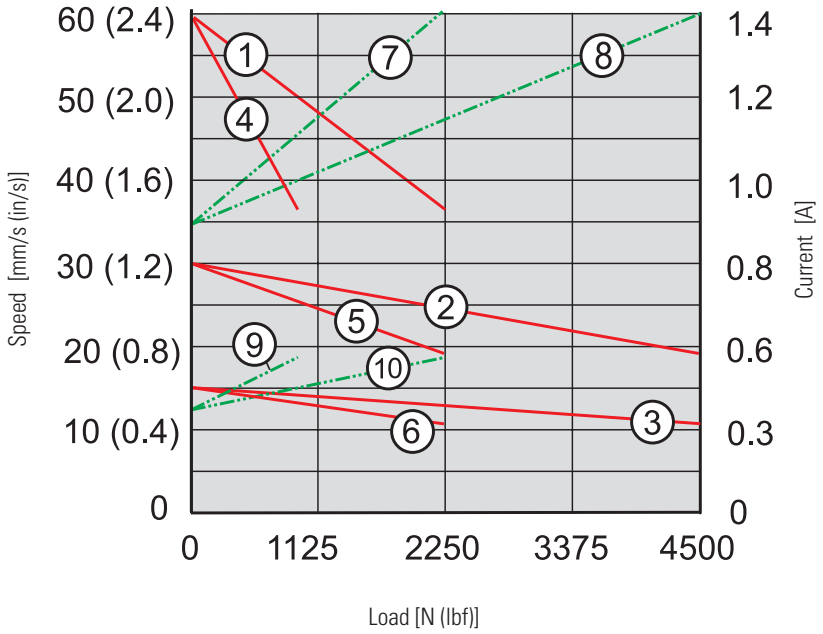

Speed

1: AA22-05B65M
2: AA22-10B65M
3: AA22-20B65M
4: AA42-05B65M
5: AA42-10B65M
6: AA42-20B65M

Current

7: AA22-05B65M
8: AA22-10B65M
AA22-20B65M
9: AA42-05B65M
10: AA42-10B65M
AA42-20B65M

Electrak® LA24 – Ordering Key

Ordering Key

1	2	3	4	5	6	7
AA22-05A65M	**10**	**M0**	**N**	**-D**	**F**	**M**

1. Model, input voltage, dynamic load capacity, screw type, maximum speed

AA22-05A65M = Electrak LA24, 1 × 230 Vac, 1100 N, acme, 54 mm/s
AA22-10A65M = Electrak LA24, 1 × 230 Vac, 2250 N, acme, 30 mm/s
AA22-20A65M = Electrak LA24, 1 × 230 Vac, 2250 N, acme, 15 mm/s
AA22-05B65M = Electrak LA24, 1 × 230 Vac, 2250 N, ball, 61 mm/s
AA22-10B65M = Electrak LA24, 1 × 230 Vac, 4500 N, ball, 30 mm/s
AA22-20B65M = Electrak LA24, 1 × 230 Vac, 4500 N, ball, 15 mm/s
AA42-10A65M = Electrak LA24, 3 × 400 Vac, 1100 N, acme, 30 mm/s
AA42-20A65M = Electrak LA24, 3 × 400 Vac, 1100 N, acme, 15 mm/s
AA42-05B65M = Electrak LA24, 3 × 400 Vac, 1100 N, ball, 61 mm/s
AA42-10B65M = Electrak LA24, 3 × 400 Vac, 2250 N, ball, 30 mm/s
AA42-20B65M = Electrak LA24, 3 × 400 Vac, 2250 N, ball, 15 mm/s

2. Ordering stroke length

05 = 50 mm
10 = 100 mm
15 =150 mm
20 = 200 mm
25 = 250 mm
30 = 300 mm
35 = 350 mm
40 = 400 mm
45 = 450 mm
50 = 500 mm
55 = 550 mm
60 = 600 mm

3. Rear / front adapter hole position [1]

M0 = both adapters at 0° (standard position)
MF = both adapters at 90°

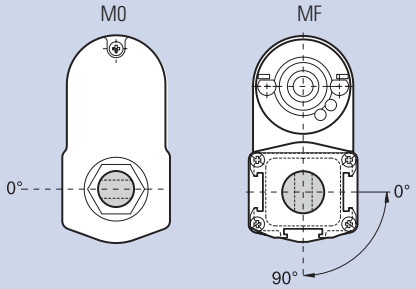

4. Options

N = no option
B = anti-coast brake [2]
NPO = potentiometer
NHW = manual override [1]
BPO = anti-coast brake and potentiometer [2]
BHW = anti-coast brake and manual override [2]

Dimensions for manual override option

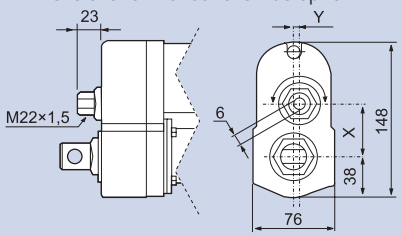

Model	X	Y
DAxx05A(B)65-	49.6	0.0
DAxx10A(B)65-	43.3	5.2
DAxx20(21)A(B)65-	38.9	0.0

5. Connector option

-D = no connector (flying leads)

6. Front adapter option

E = cross hole for 0.5 inch pin
F = forked cross hole for 0.5 inch pin
G = 1/2-20 UNF 2B female thread
K = cross hole for 10 mm pin
M = cross hole for 12 mm pin
N = forked cross hole for 12 mm pin
P = M12 female thread

7. Rear adapter option

E = cross hole for 0.5 inch pin
K = cross hole for 10 mm pin
M = cross hole for 12 mm pin

(1) Only adapter position M0 possible with option manual override.
(2) Ball screw versions must always be ordered with anti-coast brake while acme versions can be ordered with or without.

Electrak LA24 – Electrical Connections

Input Voltage 230 Vac

Actuator supply voltage [Vac] AA22-	1 × 230

No anti-coast brake

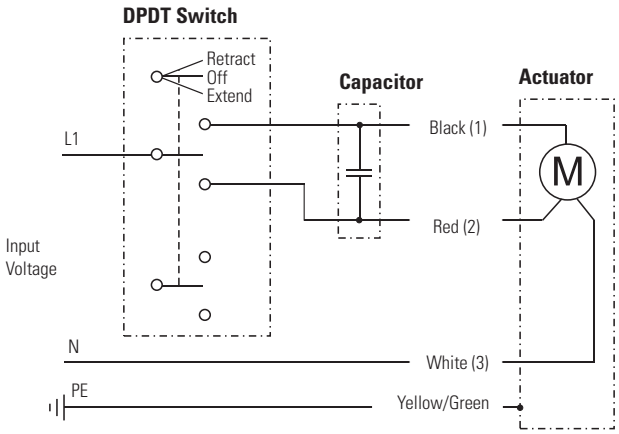

With anti-coast brake

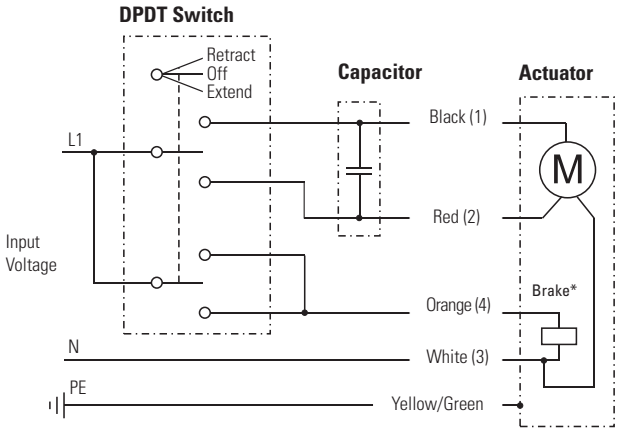

Leads can be either color or number marked. To be able to run the actuator, a 10 µF capacitor must be connected between black (1) and red (2) leads. See page130 for ordering of capacitors. Connect black (1) lead to L1 and white (3) lead to N (neutral) to retract the actuator. Change L1 from lead black (1) to lead red (2) to extend the actuator. If the actuator has an anti-coast brake*, it must be released during motion, which is done by connecting orange (4) lead to L1.

Input Voltage 400 Vac

Actuator supply voltage [Vac] AA42-	3 × 400

No anti-coast brake

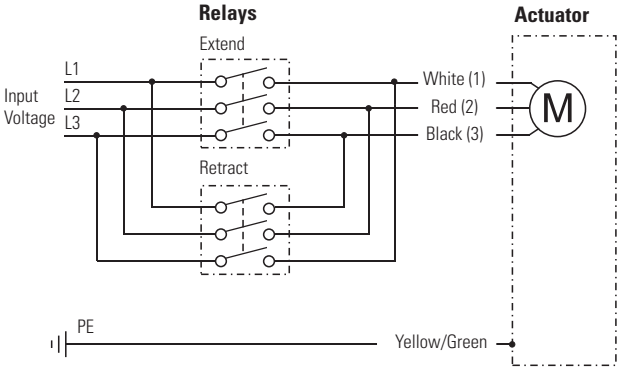

With anti-coast brake

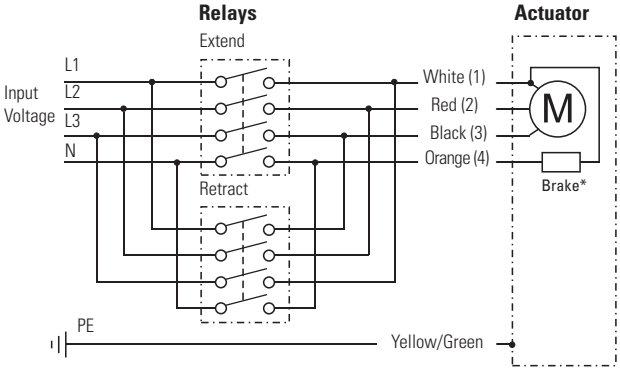

Leads can be either color or number marked. Connect white (1) lead to L1, red (2) lead to L2 and black (3) lead to L3 to extend the actuator. Change the places of white (2) lead and black (3) to retract the actuator. If the actuator has an anti-coast brake*, it must be released during motion, which is done by connecting orange (4) lead to N (neutral).

Electrak® LA24 – Electrical Connections

Input Voltage 230 Vac + Option Potentiometer		
Actuator supply voltage AA22-	[Vac]	 1 × 230
Potentiometer type		wire-wound
Potentiometer max. input voltage	[Vdc]	32
Potentiometer max. power	[W]	2
Potentiometer linearity	[%]	± 0.25
Potentiometer output resolution 50 - 255 mm stroke 256 - 510 mm stroke 511 - 600 mm stroke	[ohm/mm]	 39 20 10

Leads can be either color or number marked. To be able to run the actuator, a 10 µF capacitor must be connected between black (1) and red (2) leads. See page 130 for ordering of capacitors. Connect black (1) lead to L1 and white (3) lead to N (neutral) to retract the actuator. Change L1 from lead black (1) to lead red (2) to extend the actuator. If the actuator has an anti-coast brake*, it must be released during motion, which is done by connecting orange (4) lead to L1. The potentiometer output cable has 0 ohm between gray and yellow leads when the actuator is fully extended.

No anti-coast brake

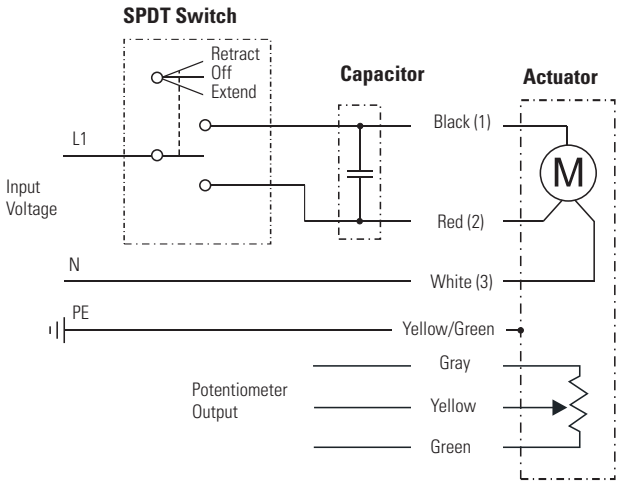

With anti-coast brake

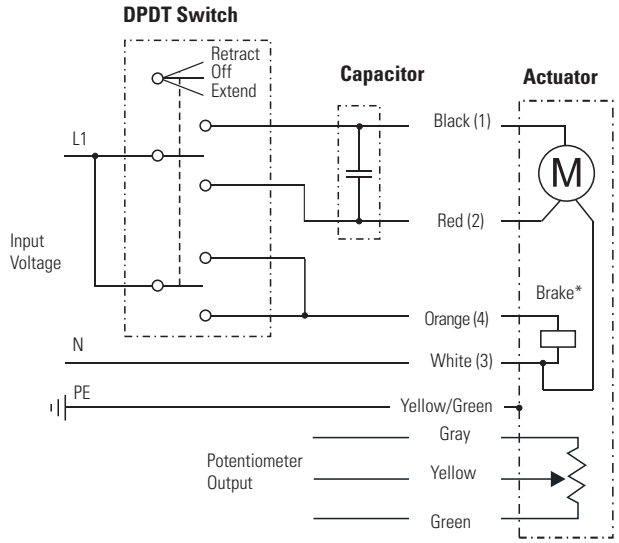

Input Voltage 400 Vac + Option Potentiometer		
Actuator supply voltage AA42-	[Vac]	 3 × 400
Potentiometer type		wire-wound
Potentiometer max. input voltage	[Vdc]	32
Potentiometer max. power	[W]	2
Potentiometer linearity	[%]	± 0.25
Potentiometer output resolution 50 - 255 mm stroke 256 - 510 mm stroke 511 - 600 mm stroke	[ohm/mm]	 39 20 10

Leads can be either color or number marked. Connect white (1) lead to L1, red (2) lead to L2 and black (3) lead to L3 to extend the actuator. Change the places of white (2) lead and black (3) to retract the actuator. If the actuator a have an anti-coast brake*, it must be released during motion, which is done by connecting orange (4) lead to N (neutral). The potentiometer output cable has 0 ohm between gray and yellow leads when the actuator is fully extended.

No anti-coast brake

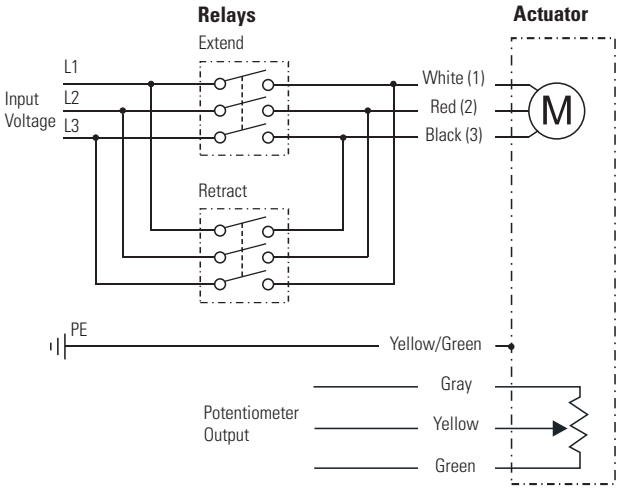

With anti-coast brake

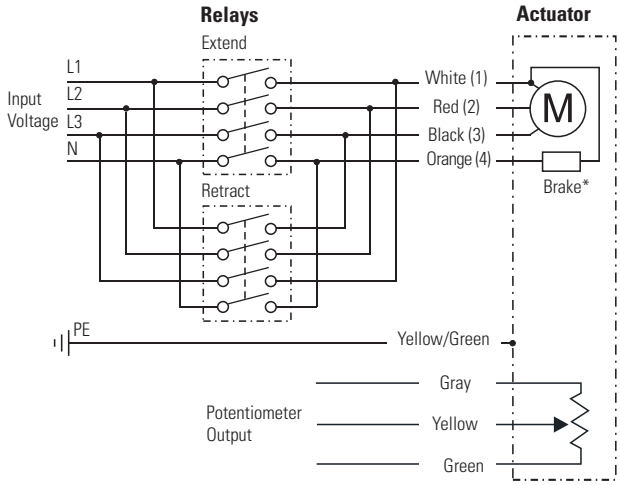

Electrak® LA24 – Accessories

Capacitor Kits

Designation	Actuator Supply Voltage	Part Number
Capacitor kit	230 Vac	9200-448-003

All 230 Vac actuators require a capacitor to be wired between the windings to run. The capacitor is bought separately and mounted externally by the customer.

Mounting Pin Kits

Designation	A [mm (in)]	Part Number
Mounting pins (pair)	12 (0.47)	D603 023

The mounting pins are used in the rear and front adapter holes of the actuator. The pins have a groove in each end so that it can be secured with snap rings.

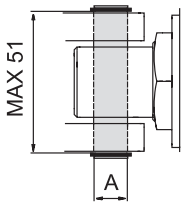

Dimensions
mm

Magnetic Sensor

Designation	Contact Type	Part Number
Magnetic sensor	normally open	D535 070
Magnetic sensor	normally closed	D535 071
Magnetic sensor	changing	D535 073

Specifications

Parameter		D535 070 D535 071	D535 073
Maximum power	[W]	10	10
Maximum voltage	[Vdc]	100	100
Maximum current	[A]	0,5	0,5
Maximum contact resistance	[ohm]	20	20
Lead cross section	[mm²]	2 × 0,14	3 × 0,14
Cable length	[mm]	3000	3000
Protection class		IP67	IP67

The magnetic sensor fits in to the T-slot running along three sides of the cover tube. The cable is moulded into the sensor.

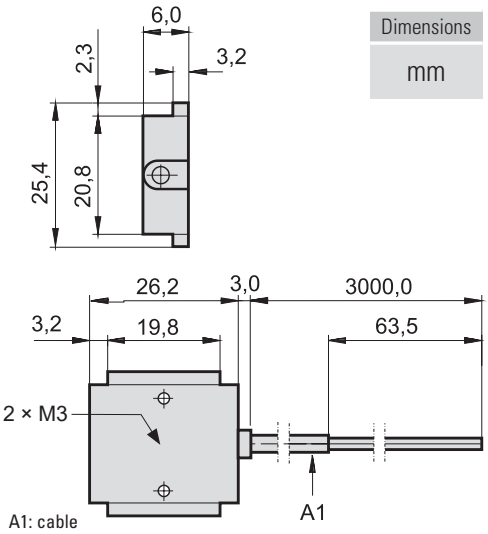

Dimensions
mm

Mounting Pin Bracket Kits

Designation	Part Number
Mounting pin brackets (pair)	D603 029

The mounting pin brackets are used to attach the front and rear adapter via a pair of mounting pins to the objects to which it is mounted. Note! one pair of brackets is needed per adapter as there must be a bracket on each side of the adapter.

Dimensions
mm

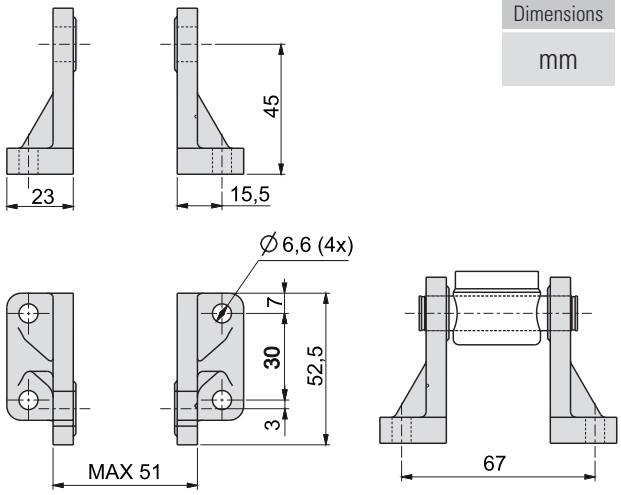

Trunnion Mounting Kits

Designation	Part Number
Trunnions (pair)	D603 022
Trunnion brackets (pair)	D603 030

The trunnions can be mounted to the T-slot running along the right and left side of the cover tube.

Trunnions

Dimensions
mm

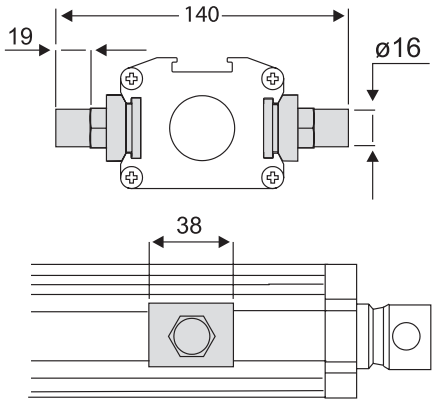

Trunnion Brackets

Dimensions
mm

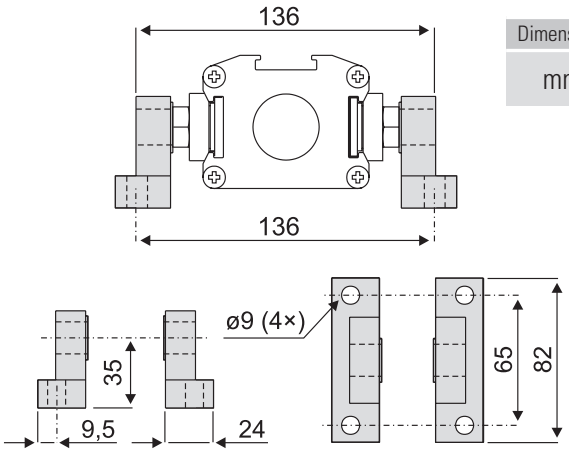

B-Track IC DC – Technical Features

SMART

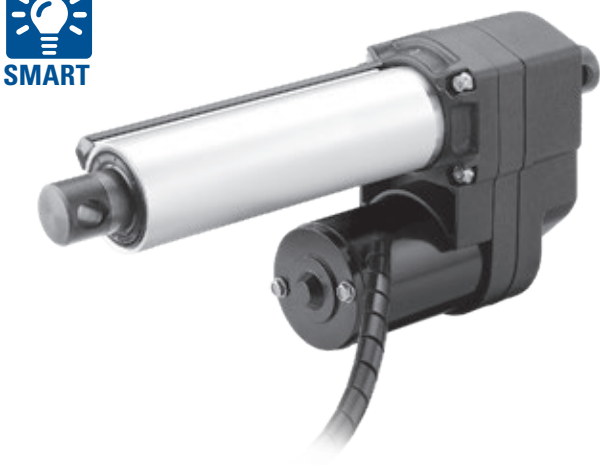

Standard Features

- Robust and reliable
- 12 and 24 Vdc as standard input voltages
- Acme and ball screw models
- Strokes up to 24 inch
- Load up to 12460 N (2800 lbf)
- IP66/IP69K protection
- Integrated controls for position feedback, end-of-stroke limit switches and end-of-stroke indication outputs
- Externally adjustable limit switches optional

General Specifications

Screw type	acme or ball
Nut type K2 (acme screw) K2X (ball screw)	 self locking lead nut load lock ball nut
Manual override	yes
Anti-rotation	no
Static load holding brake acme screw models ball screw models	 no (self locking) yes
Safety features	overload clutch motor auto reset thermal switch
Anti coast brake K2 (acme screw) K2X (ball screw)	 no no
Electrical connections power control options	 flying leads with Packard 56 connector control option dependent
Compliances	CE

Optional Electrical Features

Integrated end-of-stroke limit switches
Integrated end-of-stroke limit switches + end-of-stroke indication outputs
Externally adjustable end-of-stroke limit switches
Externally adjustable end-of-stroke limit switches + end-of-stroke indication outputs
Analog potentiometer position feedback output
Analog potentiometer position feedback output + externally adjustable end-of-stroke limit switches

Compatible Controls

Contact customer support at www.thomsonlinear.com/cs

B-Track IC DC – Technical Specifications

Mechanical Specifications

Max. static load [1]	[N (lbf)]	13345 (3000)
Max. dynamic load (Fx)	[N (lbf)]	
K2xxxxxG05-		1335 (300)
K2xxxxxG10-		2670 (600)
K2xxxxxG20-		5340 (1200)
K2xxxxxG30-		6675 (1500)
K2Xxxxxx G05-		2670 (600)
K2Xxxxxx G10-		5340 (1200)
K2Xxxxxx G20-		9790 (2200)
K2Xxxxxx G30-		12460 (2800)
Speed @ no load/max. load	[mm/s (in/s)]	
K2xxxxxG05-		73 (2.85) / 43 (1.7)
K2xxxxxG10-		37 (1.45) / 15 (0.60)
K2xxxxxG20-		18 (0.70) / 8 (0.31)
K2xxxxxG30-		12 (0.48) / 7 (0.27)
K2Xxxxx G05-		67 (2.65) / 28 (1.10)
K2Xxxxxx G10-		37 (1.45) / 17 (0.65)
K2Xxxxxx G20-		19 (0.75) / 6.5 (0.25)
K2Xxxxxx G30-		11 (0.45) / 9.5 (0.38)
Min. ordering stroke (S) length	[in]	4
Max. ordering stroke (S) length	[in]	24
Operating temperature limits	[°C (F)]	- 29 – 65 (- 20 – 150)
Full load duty cycle @ 25 °C (77 °F)	[%]	25
End play, maximum	[mm (in)]	1.0 (0.04)
Restraining torque	[Nm (lbf-in)]	11.3 (100)
Protection class - static		IP66/IP69K
Salt spray resistance	[h]	250

(1) Max. static load at fully retracted stroke

Electrical Specifications

Available input voltages	[Vdc]	12, 24
Input voltage tolerance	[%]	± 10
Current draw @ no load/max. load	[A]	
K2xxxxxG05-12 V		3.8 / 25
K2xxxxxG05-24V		2.0 / 12
K2xxxxxG10-12V		3.8 / 25
K2xxxxxG10-24V		0.75 / 12
K2xxxxxG20-12V		2.0 / 25
K2xxxxxG20-24V		0.75 / 12
K2xxxxxG30-12V		2.0 / 21
K2xxxxxG30-24V		0.75 /11
K2Xxxxxx G05-12V		2.0 / 25
K2Xxxxxx G05-24V		0.75 / 12
K2Xxxxxx G10-12V		2.0 / 25
K2Xxxxxx G10-24V		0.75 / 12.5
K2Xxxxxx G20-12V		2.0 / 23
K2Xxxxxx G20-24V		0.75 / 11
K2Xxxxxx G30-12V		2.0 / 25
K2Xxxxxx G30-24V		0.75 / 12.5
Flying leads length	[mm (in)]	254 (10)
Flying leads spiral wrap diameter	[mm (in)]	11.5 (0.45)
Flying leads cross section	[mm^2 (AWG)]	2 (14)

B-Track IC DC – Dimensions

K2Px.x, K2XPx.x

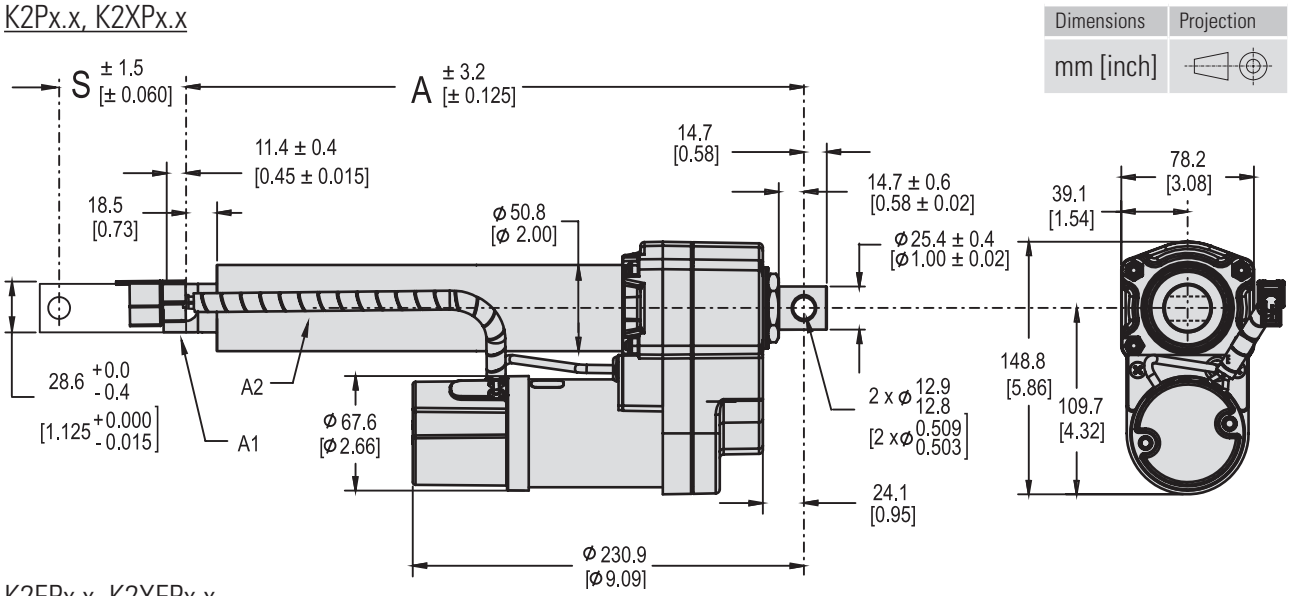

K2EPx.x, K2XEPx.x

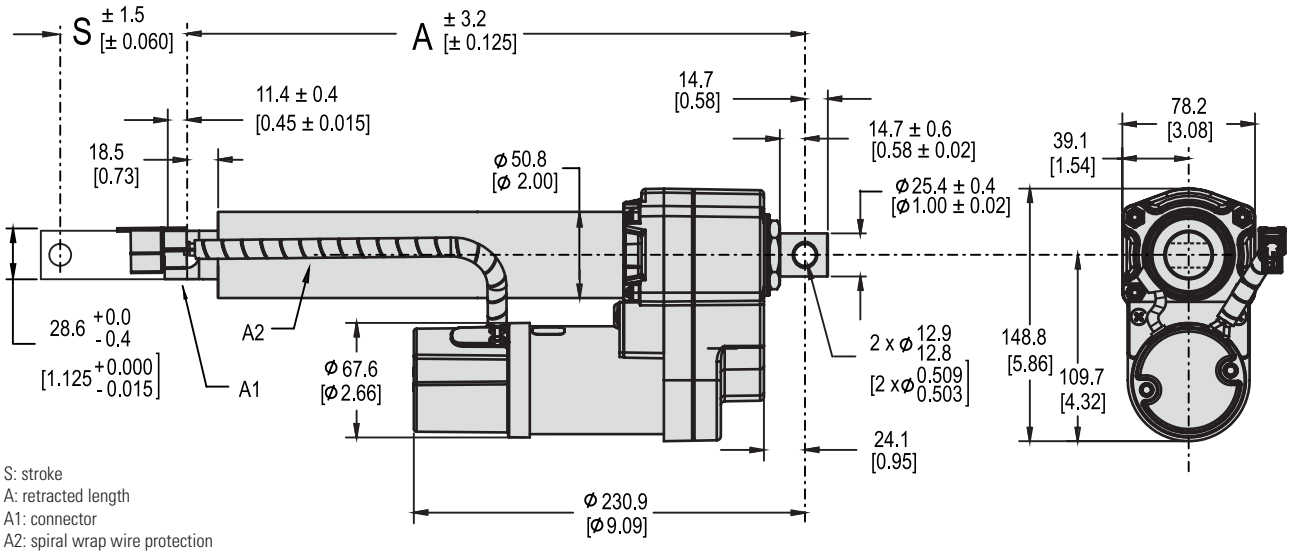

S: stroke
A: retracted length
A1: connector
A2: spiral wrap wire protection

Stroke, Retracted Length and Weight Relationships

Ordering stroke (S)	[in]	4	6	8	12	18	24
Retracted length acme screw models (A)	[mm]	262.1	312.9	363.7	465.3	617.7	846.3
	[in]	10.32	12.32	14.32	18.32	24.32	33.32
Weight acme screw models	[kg]	4.2	4.4	4.6	6.7	7.3	8.4
	[lbs]	9.3	9.7	10.2	14.7	16.1	18.5
Retracted length ball screw models and acme screw models with long nut (A)	[mm]	302.0	352.8	403.6	505.2	657.6	886.2
	[in]	11.89	13.89	15.89	19.89	25.89	34.89
Weight ball screw models	[kg]	4.4	4.7	4.9	6.9	7.5	8.6
	[lbs]	9.8	10.2	10.7	15.2	16.6	19.0

B-Track IC DC – Performance Diagrams

Acme Screw Models
Speed and Current vs. Load

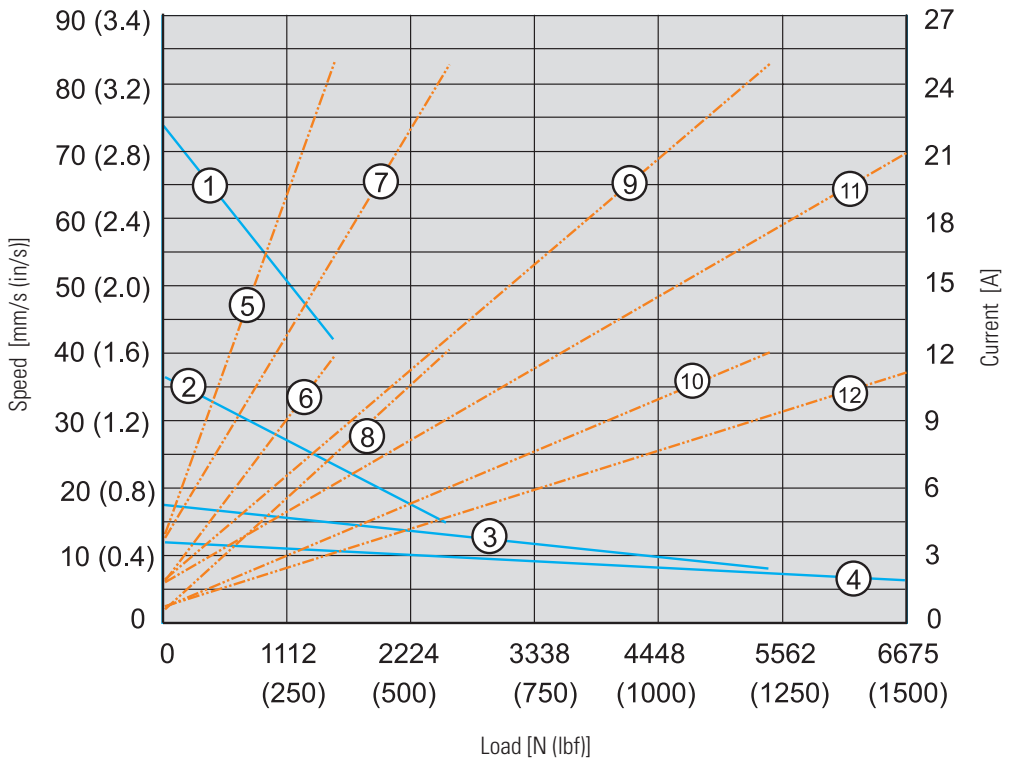

Speed
1: K2xxxxxG05-
2: K2xxxxxG10-
3: K2xxxxxG20-
4: K2xxxxxG30-

Current
5. K2xxxxxG05-12V
6. K2xxxxxG05-24V
7. K2xxxxxG10-12V
8. K2xxxxxG10-24V
9. K2xxxxxG20-12V
10. K2xxxxxG20-24V
11. K2xxxxxG30-12V
12. K2xxxxxG30-24V

Ball Screw Models
Speed and Current vs. Load

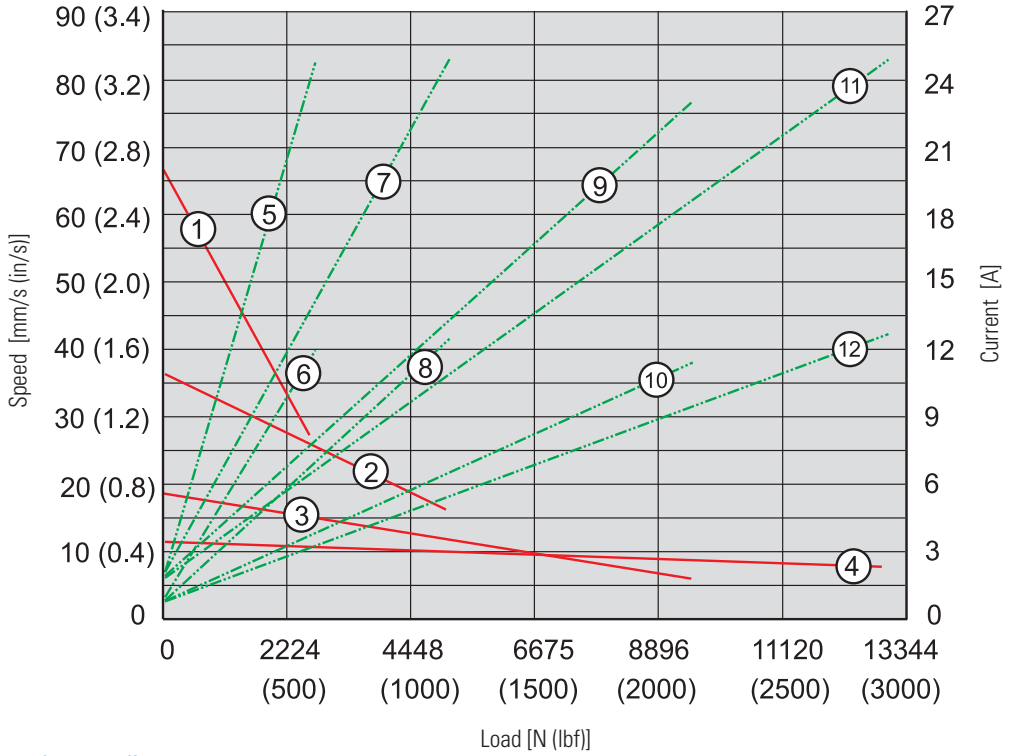

Speed
1: K2XxxxxxG05-
2: K2XxxxxxG10-
3: K2XxxxxxG20-
4: K2XxxxxxG30-

Current
5. K2XxxxxxG05-12V
6. K2XxxxxxG05-24V
7. K2XxxxxxG10-12V
8. K2XxxxxxG10-24V
9. K2XxxxxxG20-12V
10. K2XxxxxxG20-24V
11. K2XxxxxxG30-12V
12. K2XxxxxxG30-24V

B-Track IC DC – Ordering Key

Ordering Key

1	2	3	4	5	6
K2P1.0	**G05-**	**12V-**	**BR-**	**04**	

1. Model, version, control and screw type

K2P1.0 = B-Track, IC, end of stroke limit switches, acme
K2P1.2 = B-Track, IC, end of stroke limit switches + end of stroke indication output, acme
K2EP1.0 = B-Track, IC, external, adjustable end of stroke limit switches, acme
K2EP1.2 = B-Track, IC, external, adjustable end of stroke limit switches + end of stroke indication output, acme
K2EP0.4 = B-Track, IC analog potentiometer position feedback output, acme (1)
K2EP1.4 = B-Track, IC, analog potentiometer position feedback output + external, adjustable end of stroke limit switches, acme (1)
K2XP1.0 = B-Track, IC, end of stroke limit switches, ball
K2XP1.2 = B-Track, IC, end of stroke limit switches + end of stroke indication output, ball
K2XEP1.0 = B-Track, IC, external, adjustable end of stroke limit switches, ball
K2XEP1.2 = B-Track, IC, external, adjustable end of stroke limit switches + end of stroke indication output, ball
K2XEP0.4 = B-Track, IC, analog potentiometer position feedback output, ball
K2XEP1.4 = B-Track, IC, analog potentiometer position feedback output + external, adjustable end of stroke limit switches, ball

2. Dynamic load capacity (acme screw / ball screw models)

G05- = 1335 N (300 lbf) / 2670 N (600 lbf)
G10- = 2670 N (600 lbf) / 5340 N (1200 lbf)
G20- = 5340 N (1200 lbf) / 9790 N (2200 lbf)
G30- = 6675 N (1500 lbf) / 12460 N (2800 lbf) (2)

3. Supply voltage

12V = 12 Vdc
24V = 24 Vdc

4. Nut type

BR- = Acme screw nut (for K2P and K2E models only)
BRL- = Long acme screw nut (for K2P and K2E models only) (3)
- = Ball screw nut (for K2X models only)

5. Ordering stroke length (4)

04- = 4 inch
06- = 6 inch
08- = 8 inch
12- = 12 inch
18- = 18 inch
24- = 24 inch

6. Rear adapter orientation

blank = standard
R30 = 30 ° turned
R60 = 60 ° turned
R90 = 90 ° turned
R120 = 120 ° turned
R150 = 150 ° turned

(1) Only possible with nut type BRL
(2) Not possible with nut type BR
(3) An acme screw unit with long nut has the same retracted length (distance A) as a unit of the same stroke with a ball screw.
(4) Other stroke lengths possible on request, please contact customer support.

B-Track IC DC – Electrical Connections

K2xP1.0xxx-12(24)V		
Actuator supply voltage K2xxxxxxxxxx12V K2xxxxxxxxxx24V	[Vdc]	 12 24

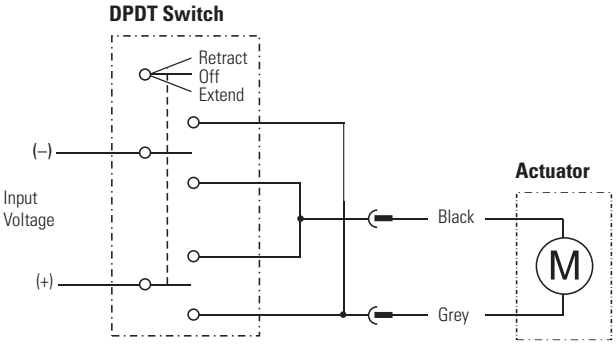

Connect the grey lead to positive and black to negative to extend the actuator. Change polarity to retract the actuator. The actuator has internal end-of-stroke limit switches which when affected will stop further motion in respectively direction.

K2xP1.2xxx-12(24)V		
Actuator supply voltage K2xxxxxxxxxx12V K2xxxxxxxxxx24V	[Vdc]	 12 24
End-of-stroke indication outputs supply voltage	[Vdc]	12 - 24
End-of-stroke indication outputs output voltage	[Vdc]	same as the supply voltage
End-of-stroke indication outputs maximum current	[A]	0.5
End-of-stroke indication outputs connector		Deutsch DT04-4P

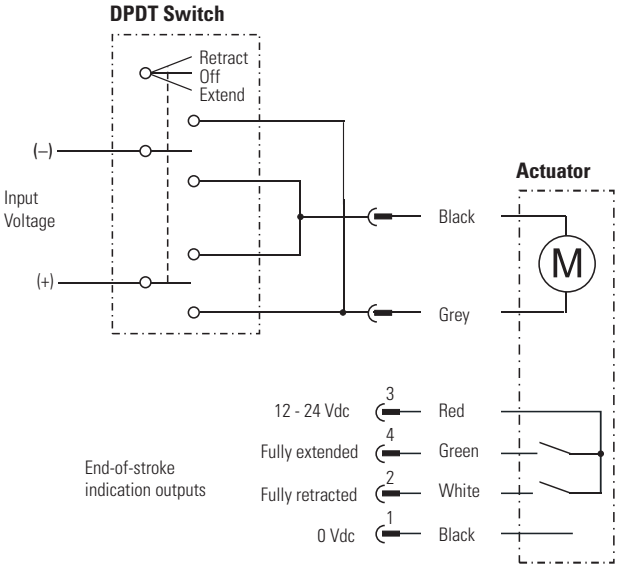

Connect the grey lead to positive and black to negative to extend the actuator. Change polarity to retract the actuator. The actuator has internal end-of-stroke limit switches which when affected will stop further motion in respectively direction and at the same time the corresponding end-of-stroke indication output will close.

B-Track IC DC – Electrical Connections

K2xEP1.0xxx-12(24)V		
Actuator supply voltage K2xxxxxxxxxx12V K2xxxxxxxxxx24V	[Vdc]	 12 24

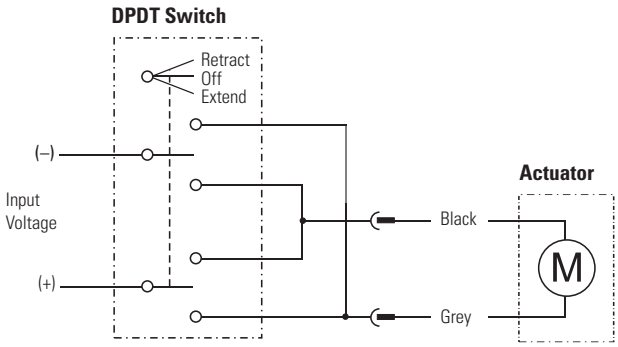

Connect the grey lead to positive and black to negative to extend the actuator. Change polarity to retract the actuator. The actuator has external adjustable end-of-stroke limit switches which when affected will stop further motion in respectively direction. The switch positions are factory set to fully extended and retracted.

K2xEP1.2xxx-12(24)V		
Actuator supply voltage K2xxxxxxxxxx12V K2xxxxxxxxxx24V	[Vdc]	 12 24
End-of-stroke indication outputs supply voltage	[Vdc]	12 - 24
End-of-stroke indication outputs output voltage	[Vdc]	same as the supply voltage
End-of-stroke indication outputs maximum current	[A]	0.5
End-of-stroke indication outputs connector		Deutsch DT04-4P

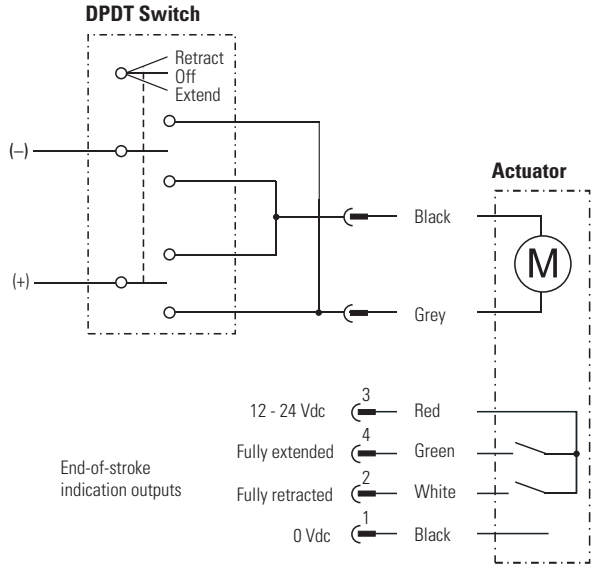

Connect the grey lead to positive and black to negative to extend the actuator. Change polarity to retract the actuator. The actuator has external adjustable end-of-stroke limit switches which when affected will stop further motion in respectively direction and at the same time the corresponding end-of-stroke indication output will close.

K2xEP0.4xxx-12(24)V		
Actuator supply voltage K2xxxxxxxxxx12V K2xxxxxxxxxx24V	[Vdc]	 12 24
Potentiometer type		membrane
Potentiometer voltage, maximum	[Vdc]	27
Potentiometer resistance	[kOhm)	12
Potentiometer tolerance	[± %]	20
Potentiometer linearity	[%]	5
Potentiometer output connector		Deutsch DT06-3S

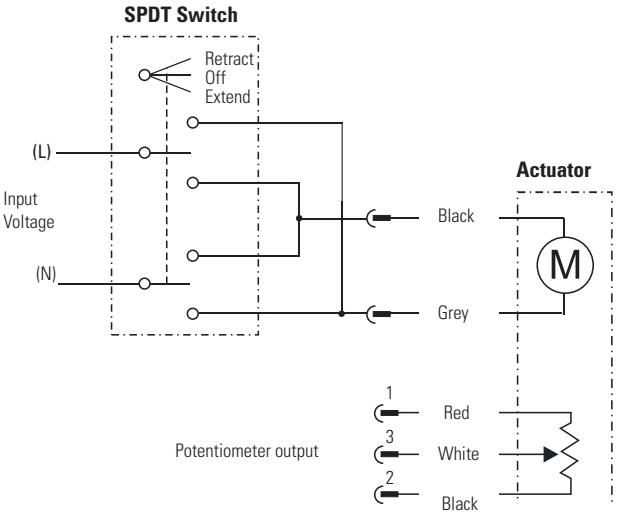

Connect the grey lead to positive and black to negative to extend the actuator. Change polarity to retract the actuator. The potentiometer output connector will between pins 2 and 3 have 0.5 kOhm when fully retracted and increase proportionally to 11.5 kOhm when fully extended.

K2xEP1.4xxx-12(24)V		
Actuator supply voltage K2xxxxxxxxxx12V K2xxxxxxxxxx24V	[Vdc]	 12 24
Potentiometer type		membrane
Potentiometer voltage, maximum	[Vdc]	27
Potentiometer resistance	[kOhm)	12
Potentiometer tolerance	[± %]	20
Potentiometer linearity	[%]	5
Potentiometer output connector		Deutsch DT06-3S

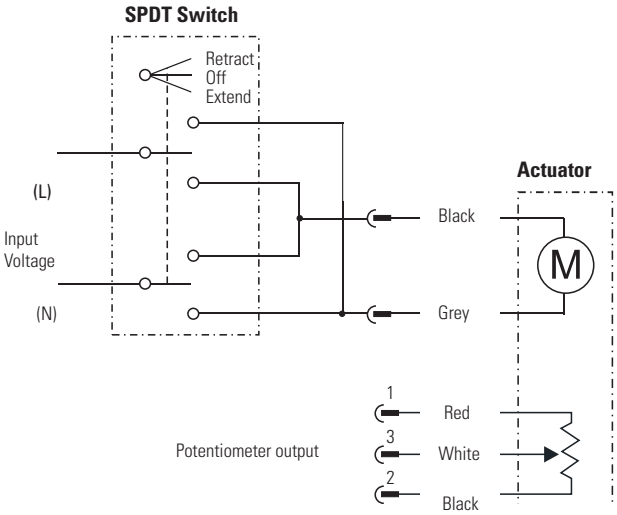

Connect the grey lead to positive and black to negative to extend the actuator. Change polarity to retract the actuator. The actuator has external adjustable end-of-stroke limit switches which when affected will stop further motion in respectively direction. The switch positions are factory set to fully extended and retracted. The potentiometer output connector will between pins 2 and 3 have 0.5 kOhm when fully retracted and increase proportionally to 11.5 kOhm when fully extended. If the external end-of-stroke sensors are moved in order to limit the stroke the output signal from the potentiometer will be reduced accordingly meaning if the maximum extended move is reduced by 50%, then the resistance at that point will be 50% of 11.5 kOhm.

B-Track IC AC – Technical Features

SMART

Standard Features

- Robust and reliable
- 1 × 115 and 1 × 230 Vac as standard input voltages
- Acme and ball screw models
- Strokes up to 24 inch
- Load up to 8900 N (2000 lbf)
- IP54 protection
- Integrated controls for position feedback, end-of-stroke limit switches and end-of-stroke indication outputs
- Externally adjustable limit switches optional

General Specifications

Screw type	acme or ball
Nut type K2 (acme screw) K2X (ball screw)	 self locking lead nut load lock ball nut
Manual override	yes
Anti-rotation	no
Static load holding brake acme screw models ball screw models	 no (self locking) yes
Safety features	overload clutch motor auto reset thermal switch
Anti coast brake K2 (acme screw) K2X (ball screw)	 no no
Electrical connections power control options	 cable with flying leads control option dependent
Compliances	CE, UKCA

Optional Electrical Features

Integrated end-of-stroke limit switches
Integrated end-of-stroke limit switches + end-of-stroke indication outputs
Externally adjustable end-of-stroke limit switches
Externally adjustable end-of-stroke limit switches + end-of-stroke indication outputs
Analog potentiometer position feedback output
Analog potentiometer position feedback output + externally adjustable end-of-stroke limit switches

Compatible Controls

Contact customer support at www.thomsonlinear.com/cs

B-Track IC AC – Technical Specifications

Mechanical Specifications

Max. static load [1]	[N (lbf)]	13345 (3000)
Max. dynamic load (Fx)	[N (lbf)]	
K2xxxxxG10-		2225 (500)
K2xxxxxG20-		3338 (750)
K2xxxxxG30-		4895 (1100)
K2XxxxxxG05-		2225 (500)
K2XxxxxxG10-		4450 (1000)
K2XxxxxxG20-		6675 (1500)
K2XxxxxxG30-		8900 (2000)
Speed @ no load/max. load	[mm/s (in/s)]	
K2xxxxxG10-		26.5 (1.07) / 23 (0.9)
K2xxxxxG20-		14.5 (0.58) / 13 (0.52)
K2xxxxxG30-		10 (0.39) / 9 (0.35)
K2XxxxxxG05-		44.(1.75) / 32 (1.28)
K2XxxxxxG10-		26.5 (1.07) / 24 (0.94)
K2XxxxxxG20-		14 (0.55) / 12.5 (0.5)
K2XxxxxxG30-		9.5 (0.38) / 8 (0.32)
Min. ordering stroke (S) length	[in]	4
Max. ordering stroke (S) length	[in]	24
Operating temperature limits	[°C (F)]	- 29 – 65 (- 20 – 150)
Full load duty cycle @ 25 °C (77 °F)	[%]	25
End play, maximum	[mm (in)]	1.0 (0.04)
Restraining torque	[Nm (lbf-in)]	11.3 (100)
Protection class - static		IP54
Salt spray resistance	[h]	250

(1) Max. static load at fully retracted stroke

Electrical Specifications

Available input voltages	[Vac]	1 × 115, 1 × 230
Input voltage tolerance	[%]	± 10
Current draw @ no load/max. load	[A]	
K2xxxxxG10-115V		2.3 / 3.1
K2xxxxxG10-230V		1.2 / 1.8
K2xxxxxG20-115V		2.3 / 2.6
K2xxxxxG20-230V		1.1 / 1.3
K2xxxxxG30-115V		2.3 / 2.5
K2xxxxxG30-230V		1.1 / 1.3
K2XxxxxxG05-115V		2.3 / 3.3
K2XxxxxxG05-230V		1.2 / 1.6
K2XxxxxxG10-115V		2.4 / 3.3
K2XxxxxxG10-230V		3.2 / 4.3
K2XxxxxxG20-115V		2.3 / 2.7
K2XxxxxxG20-230V		1.1 / 1.3
K2XxxxxxG30-115V		2.4 / 2.6
K2XxxxxxG30-230V		2.8 / 3.7
Cable length	[mm (in)]	597 (23.5)
Cable diameter	[mm (in)]	10 (0.4)
Cable leads cross section	[mm^2 (AWG)]	0.75 (18)

B-Track IC AC – Dimensions

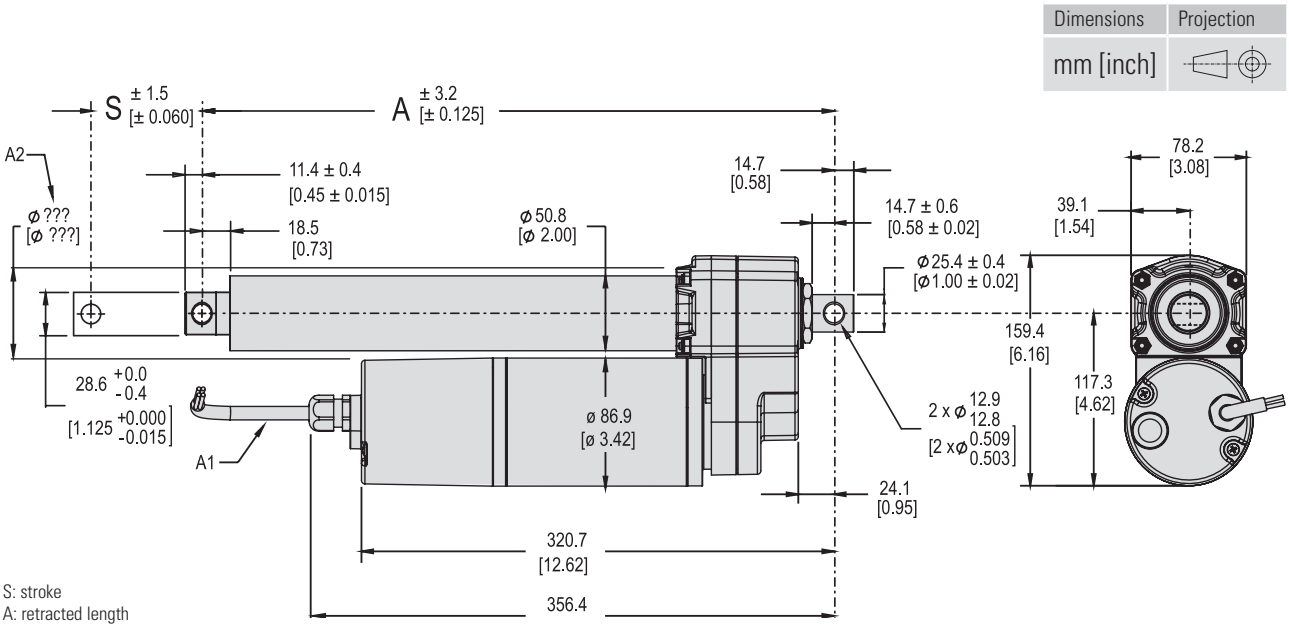

S: stroke
A: retracted length
A1: cable
A2: depending of control option the cover tube will have limit switches, limit switch rails and cables mounted within this diameter at positions that are different depending on the stroke. Therefore, make sure no external objects interfer with this diameter. If critical, please contact customer support for information on the exact position of these objects for your stroke.

Stroke, Retracted Length and Weight Relationships

Ordering stroke (S)	[in]	4	6	8	12	18	24
Retracted length acme screw models (A)	[mm]	380.0	431.0	481.1	582.9	735.1	887.0
	[in]	14.96	16.97	18.94	22.95	28.94	34.92
Weight acme screw models	[kg]	6.8	7.0	7.2	7.6	8.3	9.4
	[lbs]	14.9	15.4	15.8	16.8	18.2	20.7
Retracted length ball screw models and acme screw models with long nut (A)	[mm]	380.0	431.0	481.1	582.9	735.1	887.0
	[in]	14.96	16.97	18.94	22.95	28.94	34.92
Weight ball screw models	[kg]	7.6	7.8	8.0	8.4	9.1	10.2
	[lbs]	16.7	17.2	17.7	18.6	20.1	22.5

B-Track IC AC – Performance Diagrams

Acme Screw Models
Speed and Current vs. Load

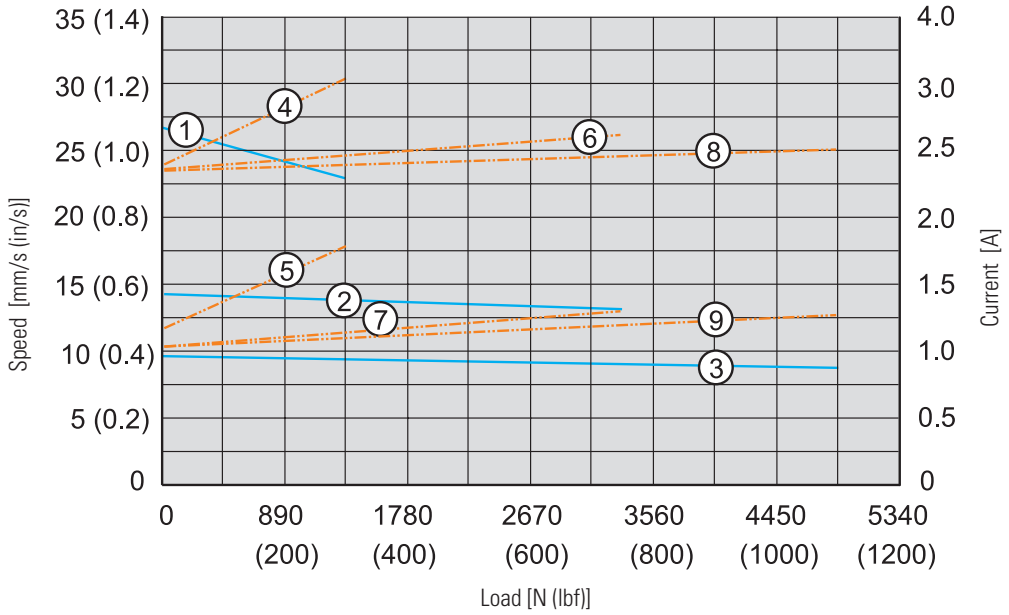

Speed
1: K2xxxxxG10-
2: K2xxxxxG20-
3: K2xxxxxG30-

Current
4. K2xxxxxG10-115V
5. K2xxxxxG10-230V
6. K2xxxxxG20-115V
7. K2xxxxxG20-230V
8. K2xxxxxG30-115V
9. K2xxxxxG30-230V

Ball Screw Models
Speed and Current vs. Load

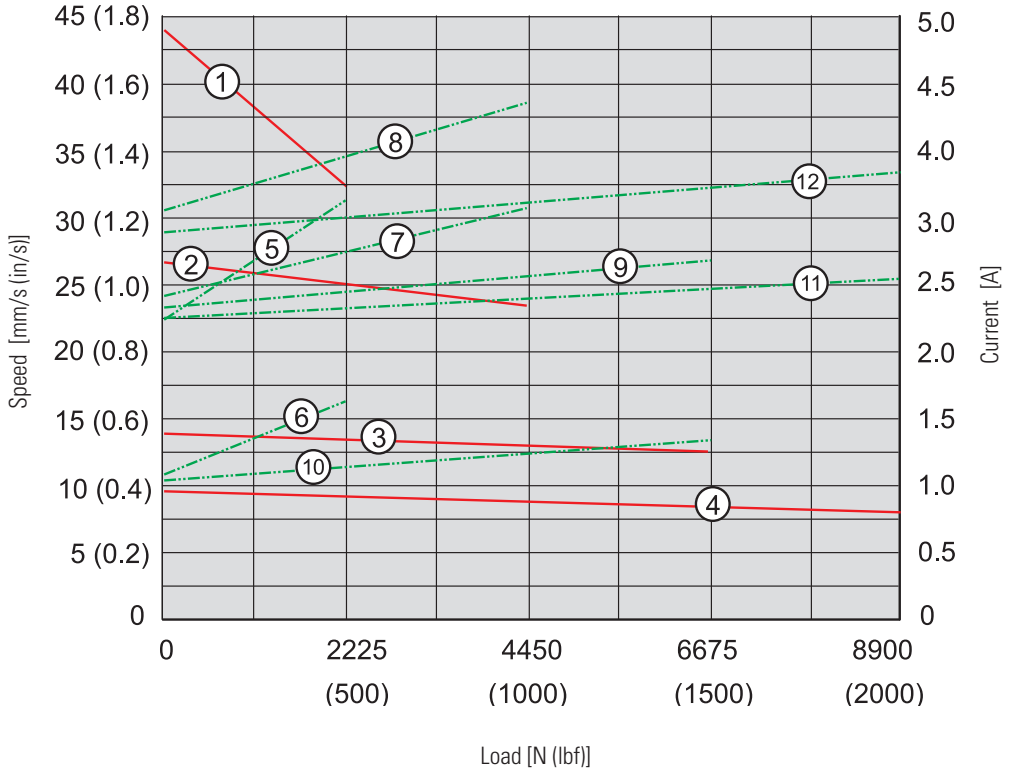

Speed
1: K2XxxxxxG05-
2: K2XxxxxxG10-
3: K2XxxxxxG20-
4: K2XxxxxxG30-

Current
5. K2XxxxxxG05-115V
6. K2XxxxxxG05-230V
7. K2XxxxxxG10-115V
8. K2XxxxxxG10-230V
9. K2XxxxxxG20-115V
10. K2XxxxxxG20-230V
11. K2XxxxxxG30-115V
12. K2XxxxxxG30-230V

B-Track IC AC – Ordering Key

Ordering Key

1	2	3	4	5	6
K2EP0.4	**G10-**	**115V-**	**BR-**	**04**	

1. Model, version, control and screw type

K2EP1.0 = B-Track, IC, external, adjustable end of stroke limit switches, acme
K2EP1.2 = B-Track, IC, external, adjustable end of stroke limit switches + end of stroke indication output, acme
K2EP0.4 = B-Track, IC, analog potentiometer position feedback output, acme [1]
K2EP1.4 = B-Track, IC, analog potentiometer position feedback output + external, adjustable end of stroke limit switches, acme [1]
K2XEP1.0 = B-Track, IC, external, adjustable end of stroke limit switches, ball
K2XEP1.2 = B-Track, IC, external, adjustable end of stroke limit switches + end of stroke indication output, ball
K2XEP0.4 = B-Track, IC, analog potentiometer position feedback output, ball
K2XEP1.4 = B-Track, IC, analog potentiometer position feedback output + external, adjustable end of stroke limit switches, ball

2. Dynamic load capacity (acme screw / ball screw models)

G05- = not available / 2225 N (500 lbf)
G10- = 2225 N (500 lbf) / 4450 N (1000 lbf)
G20- = 3338 N (750 lbf) / 6675 N (1500 lbf)
G30- = 4895 N (1100 lbf) / 8900 N (2000 lbf) [2]

3. Supply voltage

115V = 1 × 115 Vac
230V = 1 × 230 Vac

4. Nut type

BR- = Acme screw nut (for K2P and K2E models only)
BRL- = Long acme screw nut (for K2P and K2E models only) [3]
- = Ball screw nut (for K2X models only)

5. Ordering stroke length [4]

04 = 4 inch
06 = 6 inch
08 = 8 inch
12 = 12 inch
18 = 18 inch
24 = 24 inch

6. Rear adapter orientation

blank = standard
R30 = 30 ° turned
R60 = 60 ° turned
R90 = 90 ° turned
R120 = 120 ° turned
R150 = 150 ° turned

(1) Only possible with nut type BRL
(2) Not possible with nut type BR
(3) An acme screw unit with long nut has the same retracted length (distance A) as a unit of the same stroke with a ball screw.
(4) Other stroke lengths possible on request, please contact customer support.

B-Track IC AC – Electrical Connections

K2xEP0.4xxx-115(230)V		
Actuator supply voltage K2xxxxxxxxx115V K2xxxxxxxxx230V	[Vac]	 1 × 115 1 × 230
Potentiometer type		membrane
Potentiometer voltage, maximum	[Vdc]	27
Potentiometer resistance	[kOhm)	12
Potentiometer tolerance	[± %]	20
Potentiometer linearity	[%]	5
Potentiometer output connector		Deutsch DT06-3S

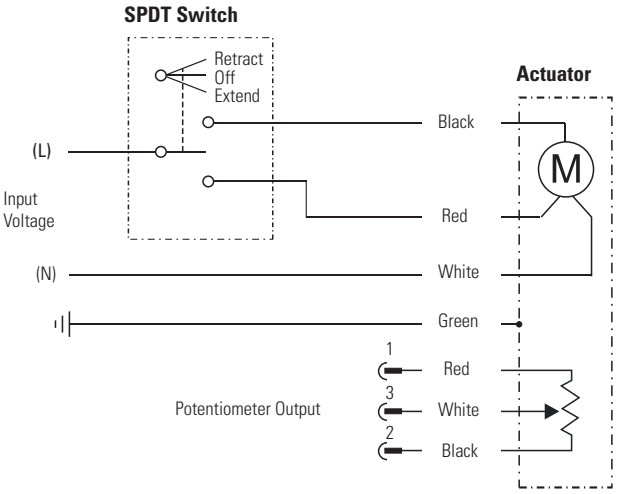

Connect white lead to neutral (N). To extend the actuator connect L to the red lead. To retract the actuator, change L to the black lead. The potentiometer output connector will between pins 2 and 3 have 0.5 kOhm when fully retracted and increase proportionally to 11.5 kOhm when fully extended.

K2xEP1.4xxx-115(230)V		
Actuator supply voltage K2xxxxxxxxx115V K2xxxxxxxxx230V	[Vac]	 1 × 115 1 × 230
Potentiometer type		membrane
Potentiometer voltage, maximum	[Vdc]	27
Potentiometer resistance	[kOhm)	12
Potentiometer tolerance	[± %]	20
Potentiometer linearity	[%]	5
Potentiometer output connector		Deutsch DT06-3S

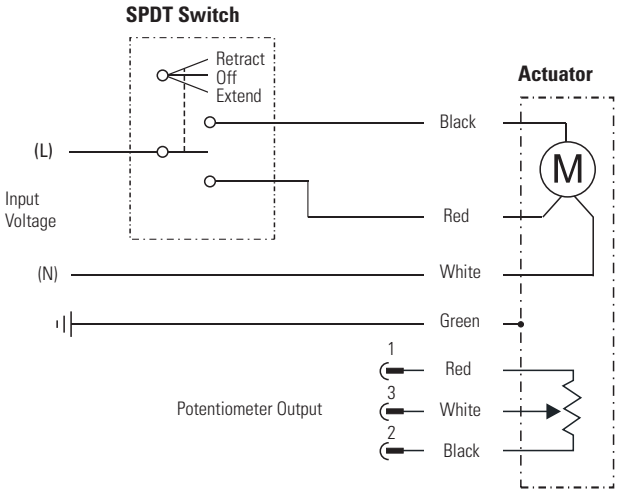

Connect white lead to neutral (N). To extend the actuator connect L to the red lead. To retract the actuator, change L to the black lead. The actuator has external adjustable end-of-stroke limit switches which when affected will stop further motion in respectively direction. The switch positions are factory set to fully extended and retracted. The potentiometer output connector will between pins 2 and 3 have 0.5 kOhm when fully retracted and increase proportionally to 11.5 kOhm when fully extended. If the external end-of-stroke sensors are moved in order to limit the stroke the output signal from the potentiometer will be reduced accordingly meaning if the maximum extended move is reduced by 50%, then the resistance at that point will be 50% of 11.5 kOhm.

B-Track DC – Technical Features

Standard Features

- Robust and reliable
- 12, 24, 36, 48 and 90 Vdc as standard input voltages
- Acme and ball screw models
- Strokes up to 24 inches
- Load up to 12460 N (2800 lbf)
- IP66/IP69K protection

General Specifications

Screw type	acme or ball
Nut type K2 (acme screw) K2X (ball screw)	 self-locking lead nut load lock ball nut
Manual override	yes
Anti-rotation	no
Static load holding brake acme screw models ball screw models	 no (self-locking) yes
Safety features	overload clutch motor auto reset thermal switch
Anti coast brake K2 (acme screw) K2X (ball screw)	 no no
Electrical connection	flying leads with Packard 56 connector
Compliances	CE, UKCA

Compatible Controls

Contact customer support at www.thomsonlinear.com/cs

B-Track DC – Technical Specifications

Mechanical Specifications

Max. static load [1]	[N (lbf)]	13345 (3000)
Max. dynamic load (Fx)	[N (lbf)]	
K2G05-		1335 (300)
K2G10-		2670 (600)
K2G20-		5340 (1200)
K2G30-		6675 (1500)
K2XG05-		2670 (600)
K2XG10-		5340 (1200)
K2XG20-		9790 (2200)
K2XG30-		12460 (2800)
Speed @ no load/max. load	[mm/s (in/s)]	
K2G05-		73 (2.85) / 43 (1.7)
K2G10-		37 (1.45) / 15 (0.60)
K2G20-		18 (0.70) / 8 (0.31)
K2G30-		12 (0.48) / 7 (0.27)
K2XG05-		67 (2.65) / 28 (1.10)
K2XG10-		37 (1.45) / 17 (0.65)
K2XG20-		19 (0.75) / 6.5 (0.25)
K2XG30-		11 (0.45) / 9.5 (0.38)
Min. ordering stroke (S) length	[in]	2
Max. ordering stroke (S) length	[in]	24
Operating temperature limits	[°C (F)]	- 29 – 65 (- 20 – 150)
Full load duty cycle @ 25 °C (77 °F)	[%]	25
End play, maximum	[mm (in)]	1.0 (0.04)
Restraining torque	[Nm (lbf-in)]	11.3 (100)
Protection class - static		IP66/IP69K
Salt spray resistance	[h]	250

(1) Max. static load at fully retracted stroke
(2) Contact customer support for data on 36, 48 or 90 Vdc models

Electrical Specifications

Available input voltages [2]	[Vdc]	12, 24, 36, 48, 90
Input voltage tolerance	[%]	± 10
Current draw @ no load/max. load	[A]	
K2G05-12V		3.8 / 25
K2G05-24V		2.0 / 12
K2G10-12V		3.8 / 25
K2G10-24V		0.75 / 12
K2G20-12V		2.0 / 25
K2G20-24V		0.75 / 12
K2G30-12V		2.0 / 21
K2G30-24V		0.75 /11
K2XG05-12V		2.0 / 25
K2XG05-24V		0.75 / 12
K2XG10-12V		2.0 / 25
K2XG10-24V		0.75 / 12.5
K2XG20-12V		2.0 / 23
K2XG20-24V		0.75 / 11
K2XG30-12V		2.0 / 25
K2XG30-24V		0.75 / 12.5
Flying leads length	[mm (in)]	254 (10)
Flying leads spiral wrap diameter	[mm (in)]	11.5 (0.45)
Flying leads cross section	[mm^2 (AWG)]	2 (14)

B-Track DC – Dimensions

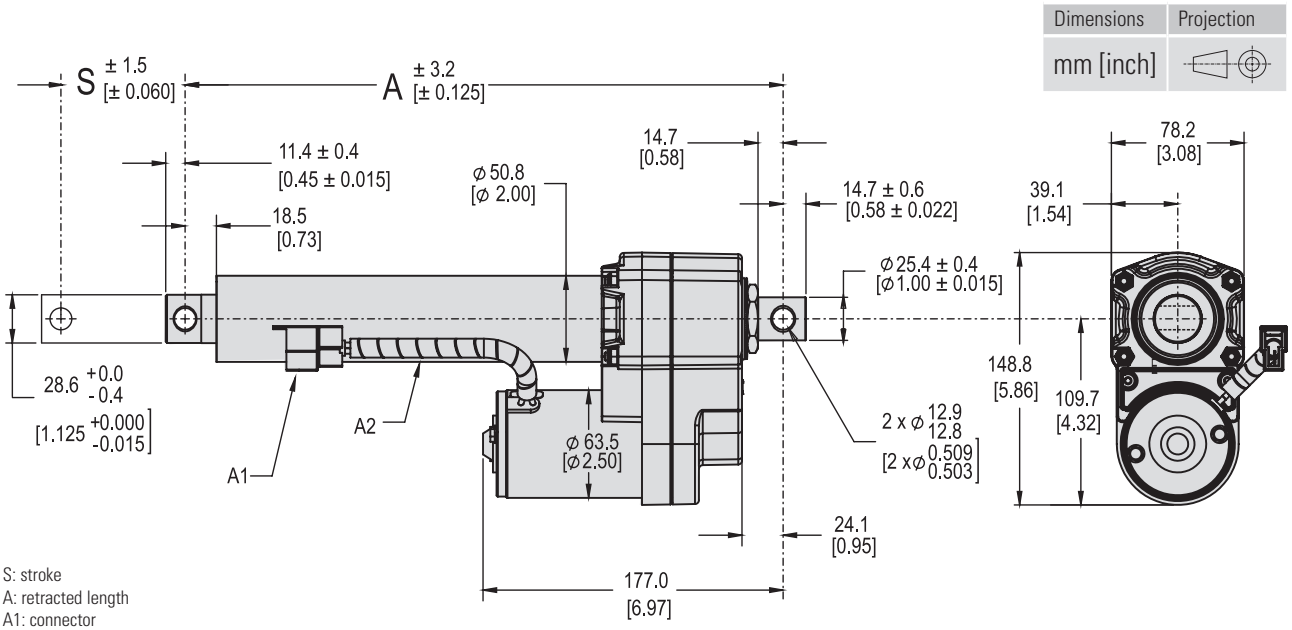

S: stroke
A: retracted length
A1: connector
A2: spiral wrap wire protection

Stroke, Retracted Length and Weight Relationships

Ordering stroke (S)	[in]	2	4	6	8	10	12	14	16	18	20	22	24
Retracted length acme screw models (A)	[mm]	211.3	262.1	312.9	363.7	414.5	465.3	516.1	566.9	617.7	744.7	795.5	846.3
	[in]	8.32	10.32	12.32	14.32	16.32	18.32	20.32	22.32	24.32	29.32	31.32	33.32
Weight acme screw models	[kg]	4.0	4.2	4.4	4.6	6.4	6.7	6.9	7.1	7.3	8.0	8.2	8.4
	[lbs]	8.8	9.3	9.7	10.2	14.2	14.7	15.2	15.7	16.1	17.6	18.1	18.5
Retracted length ball screw models and acme screw models with long nut (A)	[mm]	251.2	302.0	352.8	403.6	454.4	505.2	556.0	606.8	657.6	784.6	835.4	886.2
	[in]	9.89	11.89	13.89	15.89	17.89	19.89	21.89	23.89	25.89	30.89	32.89	34.89
Weight ball screw models	[kg]	4.2	4.4	4.6	4.9	6.7	6.9	7.1	7.3	7.5	8.2	8.4	8.6
	[lbs]	9.3	9.8	10.2	10.7	14.7	15.2	15.7	16.2	16.6	18.1	18.6	19.0

B-Track DC – Performance Diagrams

Acme Screw Models
Speed and Current vs. Load*

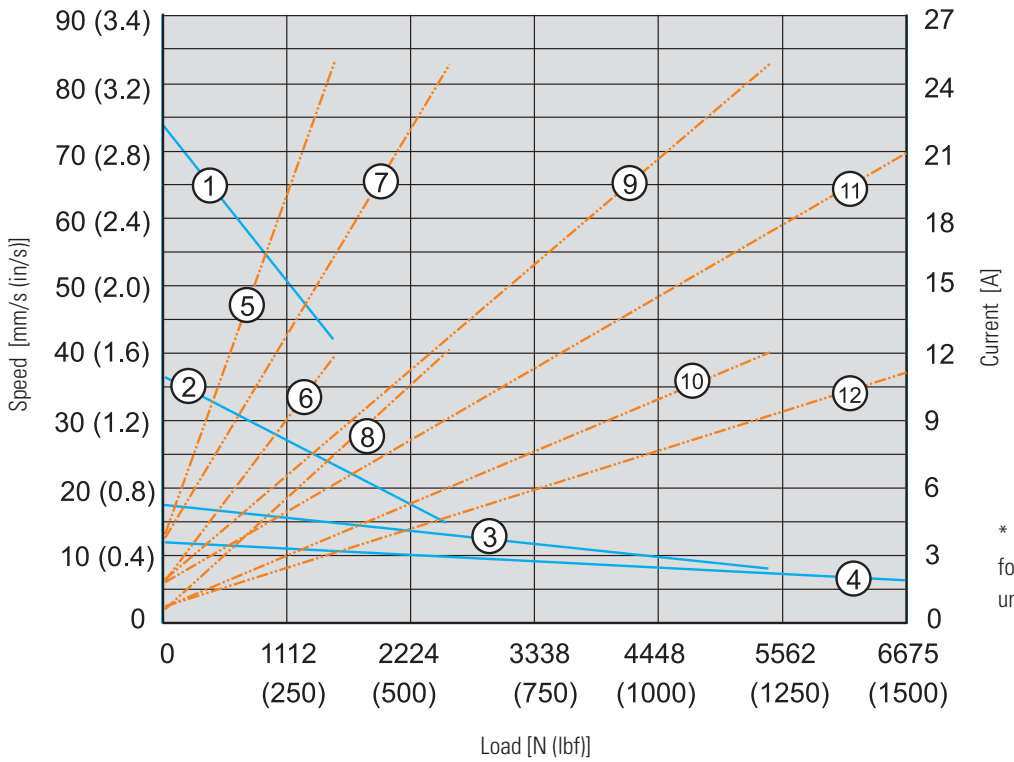

Speed
1: K2G05-
2: K2G10-
3: K2G20-
4: K2G30-

Current
5. K2G05-12V
6. K2G05-24V
7. K2G10-12V
8. K2G10-24V
9. K2G20-12V
10. K2G20-24V
11. K2G30-12V
12. K2G30-24V

* Contact customer support for data on 36, 48 and 90 Vdc units.

Ball Screw Models
Speed and Current vs. Load*

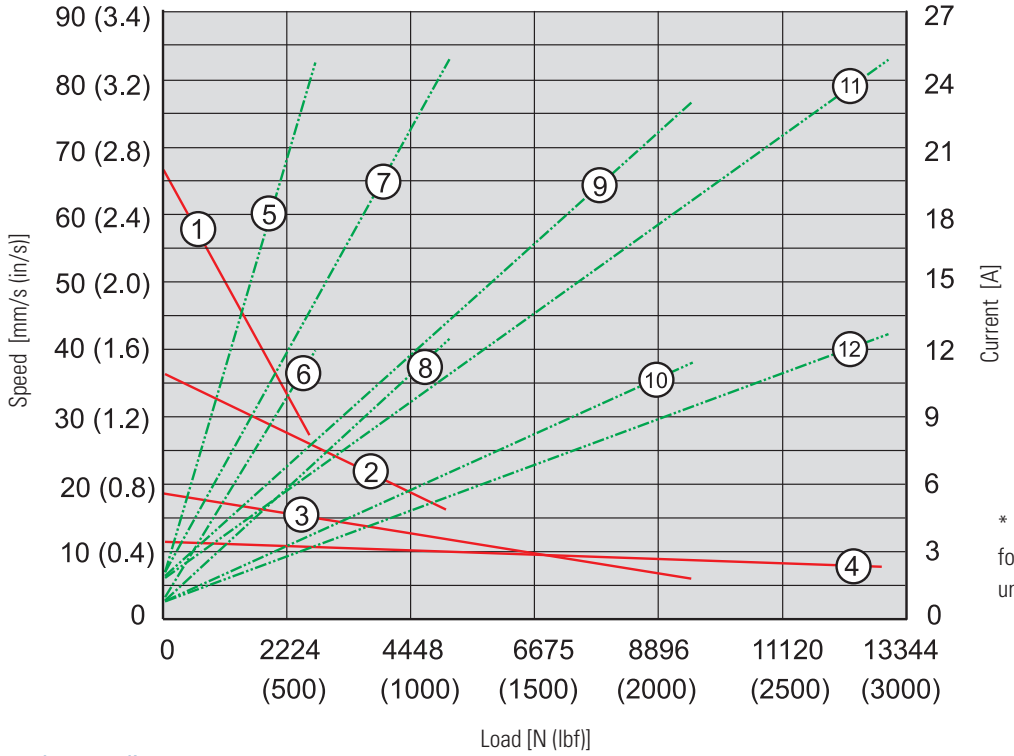

Speed
1: K2XG05-
2: K2XG10-
3: K2XG20-
4: K2XG30-

Current
5. K2XG05-12V
6. K2XG05-24V
7. K2XG10-12V
8. K2XG10-24V
9. K2XG20-12V
10. K2XG20-24V
11. K2XG30-12V
12. K2XG30-24V

* Contact customer support for data on 36, 48 and 90 Vdc units.

B-Track DC – Ordering Key

Ordering Key

1	2	3	4	5	6
K2	**G05-**	**12V**	**BR-**	**-04**	

1. Model and screw type
K2 = B-Track, acme
K2X = B-Track, ball

2. Dynamic load capacity (acme screw / ball screw models)
G05- = 1335 N (300 lbf) / 2670 N (600 lbf)
G10- = 2670 N (600 lbf) / 5340 N (1200 lbf)
G20- = 5340 N (1200 lbf) / 9790 N (2200 lbf)
G30- = 6675 N (1500 lbf) / 12460 N (2800 lbf) (1)

3. Supply voltage
12V = 12 Vdc
24V = 24 Vdc
36V = 36 Vdc
48V = 48 Vdc
90V = 90 Vdc

4. Nut type
BR- = Acme screw nut (for K2 models only)
BRL- = Long acme screw nut (for K2 models only) (2)
- = Ball screw nut (for K2X models only)

5. Ordering stroke length (3)
02 = 2 inch
04 = 4 inch
06 = 6 inch
08 = 8 inch
10 = 10 inch
12 = 12 inch
14 = 14 inch
16 = 16 inch
18 = 18 inch
20 = 20 inch
22 = 22 inch
24 = 24 inch

6. Rear adapter orientation
blank = standard
R30 = 30 ° turned
R60 = 60 ° turned
R90 = 90 ° turned
R120 = 120 ° turned
R150 = 150 ° turned

(1) Not possible with nut type BR
(2) An acme screw unit with long nut has the same retracted length (distance A) as a unit of the same stroke with a ball screw.
(3) Other stroke lengths possible on request, please contact customer support.

B-Track DC – Electrical Connections

Standard	
Actuator supply voltage [Vdc]	
K2xxxxx12V	12
K2xxxxx24V	24
K2xxxxx36V	36
K2xxxxx48V	48
K2xxxxx90V	90

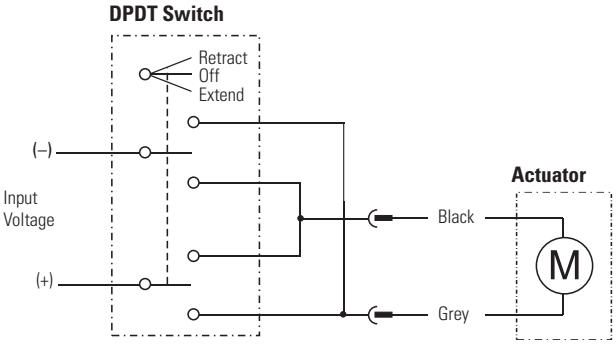

Connect the grey lead to positive and black to negative to extend the actuator. Change polarity to retract the actuator.

B-Track AC – Technical Features

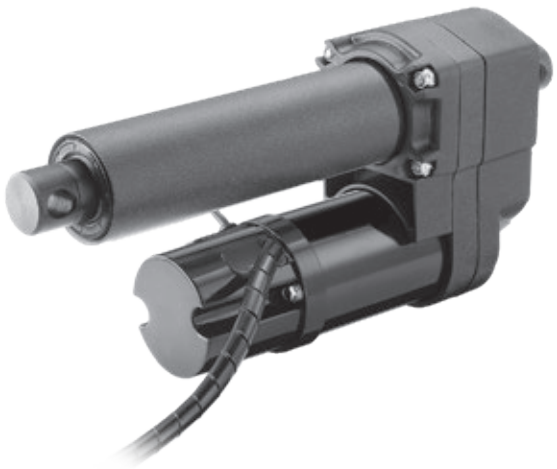

Standard Features

- Robust and reliable
- 1 × 115 and 1 × 230 Vac as standard input voltages
- Acme and ball screw models
- Strokes up to 24 inches
- Load up to 8900N (2000 lbf)
- IP54 protection

General Specifications

Screw type	acme or ball
Nut type K2 (acme screw) K2X (ball screw)	 self-locking lead nut load lock ball nut
Manual override	yes
Anti-rotation	no
Static load holding brake acme screw models ball screw models	 no (self-locking) yes
Safety features	overload clutch motor auto reset thermal switch
Anti coast brake K2 (acme screw) K2X (ball screw)	 no no
Electrical connections	cable with flying leads
Compliances	CE, UKCA

Compatible Controls

Contact customer support at www.thomsonlinear.com/cs

B-Track AC – Technical Specifications

Mechanical Specifications

Max. static load [1]	[N (lbf)]	13345 (3000)
Max. dynamic load (Fx)	[N (lbf)]	
K2G10-		2225 (500)
K2G20-		3338 (750)
K2G30-		4895 (1100)
K2XG05-		2225 (500)
K2XG10-		4450 (1000)
K2XG20-		6675 (1500)
K2XG30-		8900 (2000)
Speed @ no load/max. load	[mm/s (in/s)]	
K2G10-		26.5 (1.07) / 23 (0.9)
K2G20-		14.5 (0.58) / 13 (0.52)
K2G30-		10 (0.39) / 9 (0.35)
K2XG05-		44 (1.75) / 32 (1.28)
K2XG10-		26.5 (1.07) / 24 (0.94)
K2XG20-		14 (0.55) / 12.5 (0.5)
K2XG30-		9.5 (0.38) / 8 (0.32)
Min. ordering stroke (S) length	[in]	4
Max. ordering stroke (S) length	[in]	24
Operating temperature limits	[°C (F)]	- 29 – 65 (- 20 – 150)
Full load duty cycle @ 25 °C (77 °F)	[%]	25
End play, maximum	[mm (in)]	1.0 (0.04)
Restraining torque	[Nm (lbf-in)]	11.3 (100)
Protection class - static		IP54
Salt spray resistance	[h]	250

(1) Max. static load at fully retracted stroke

Electrical Specifications

Available input voltages	[Vac]	1 × 115, 1 × 230
Input voltage tolerance	[%]	± 10
Current draw @ no load/max. load	[A]	
K2G10-115V		2.3 / 3.1
K2G10-230V		1.2 / 1.8
K2G20-115V		2.3 / 2.6
K2G20-230V		1.1 / 1.3
K2G30-115V		2.3 / 2.5
K2G30-230V		1.1 / 1.3
K2XG05-115V		2.3 / 3.3
K2XG05-230V		1.2 / 1.6
K2XG10-115V		2.4 / 3.3
K2XG10-230V		3.2 / 4.3
K2XG20-115V		2.3 / 2.7
K2XG20-230V		1.1 / 1.3
K2XG30-115V		2.4 / 2.6
K2XG30-230V		2.8 / 3.7
Cable length	[mm (in)]	597 (23.5)
Cable diameter	[mm (in)]	10 (0.4)
Cable leads cross section	[mm^2 (AWG)]	0.75 (18)

B-Track AC – Dimensions

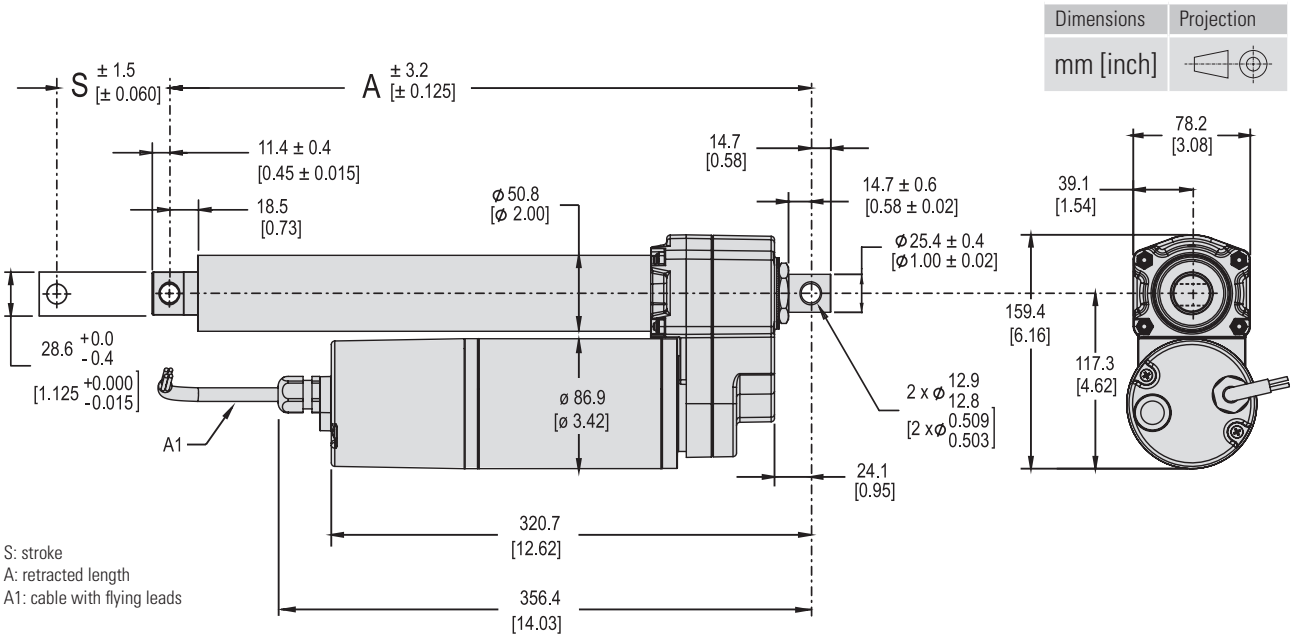

Stroke, Retracted Length and Weight Relationships

Ordering stroke (S)	[in]	4	6	8	12	18	24
Retracted length acme screw models (A)	[mm]	380.0	431.0	481.1	582.9	735.1	887.0
	[in]	14.96	16.97	18.94	22.95	28.94	34.92
Weight acme screw models	[kg]	6.8	7.0	7.2	7.6	8.3	9.4
	[lbs]	14.9	15.4	15.8	16.8	18.2	20.7
Retracted length ball screw models and acme screw models with long nut (A)	[mm]	380.0	431.0	481.1	582.9	735.1	887.0
	[in]	14.96	16.97	18.94	22.95	28.94	34.92
Weight ball screw models	[kg]	7.6	7.8	8.0	8.4	9.1	10.2
	[lbs]	16.7	17.2	17.7	18.6	20.1	22.5

B-Track AC – Performance Diagrams

Acme Screw Models
Speed and Current vs. Load

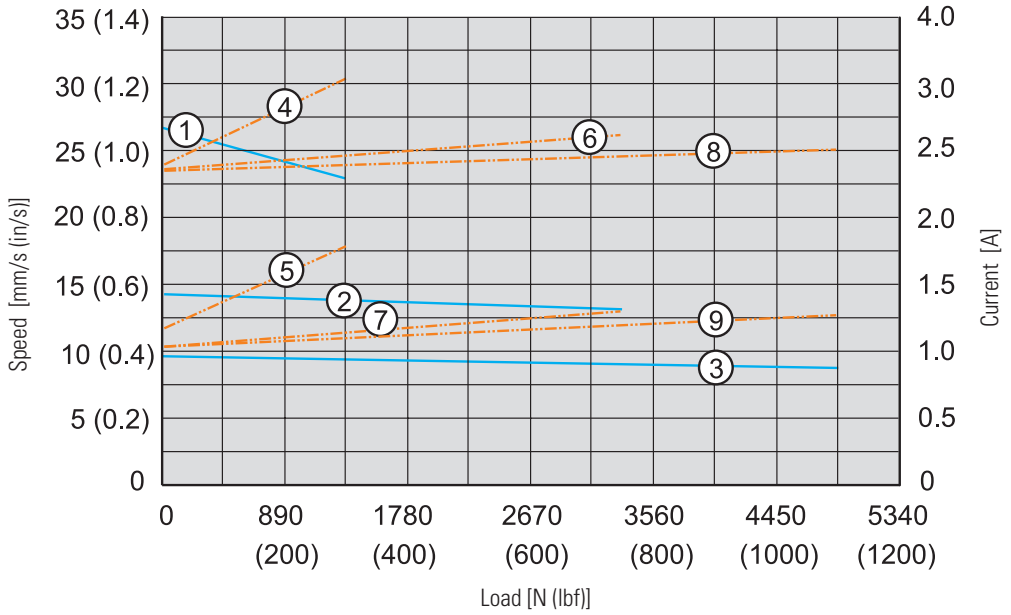

Speed
1: K2G10-
2: K2G20-
3: K2G30-

Current
4. K2G10-115V
5. K2G10-230V
6. K2G20-115V
7. K2G20-230V
8. K2G30-115V
9. K2G30-230V

Ball Screw Models
Speed and Current vs. Load

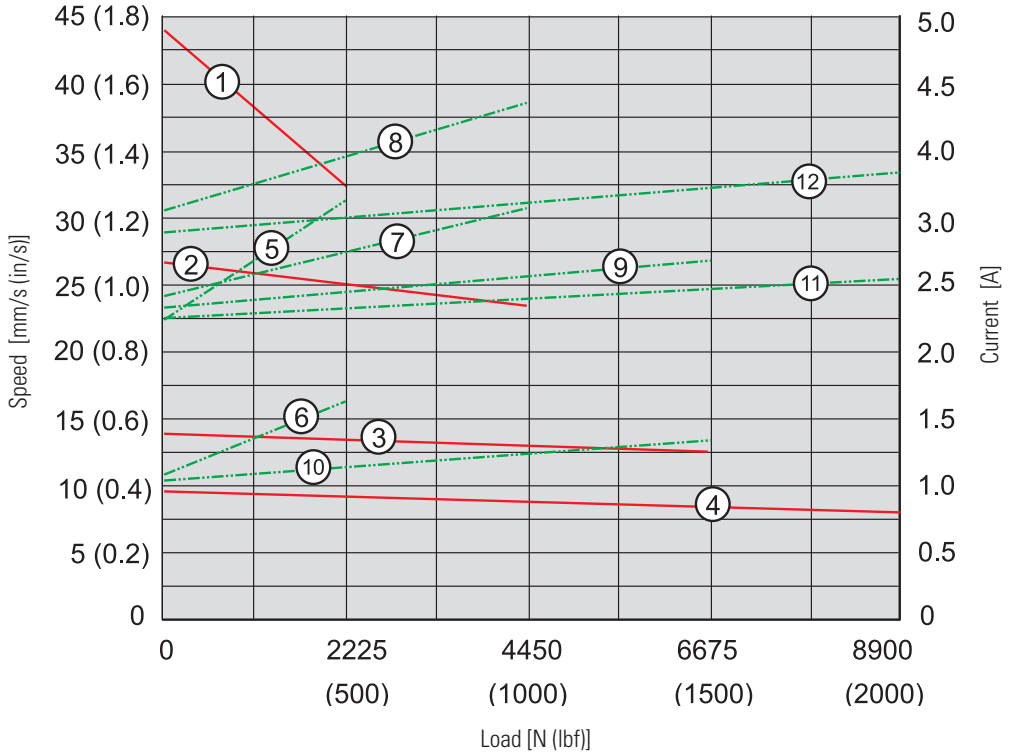

Speed
1: K2XG05-
2: K2XG10-
3: K2XG20-
4: K2XG30-

Current
5. K2XG05-115V
6. K2XG05-230V
7. K2XG10-115V
8. K2XG10-230V
9. K2XG20-115V
10. K2XG20-230V
11. K2XG30-115V
12. K2XG30-230V

B-Track AC – Ordering Key

Ordering Key

1	2	3	4	5	6
K2	**G10-**	**115V**	**BR-**	**04**	

1. Model and screw type
K2 = B-Track, acme
K2X = B-Track, ball

2. Dynamic load capacity (acme screw / ball screw models)
G05- = not available / 2225 N (500 lbf)
G10- = 2225 N (500 lbf) / 4450 N (1000 lbf)
G20- = 3338 N (750 lbf) / 6675 N (1500 lbf)
G30- = 4895 N (1100 lbf) / 8900 N (2000 lbf) (1)

3. Supply voltage
115V = 1 × 115 Vac
230V = 1 × 230 Vac

4. Nut type
BR- = Acme screw nut (for K2 models only)
BRL- = Long acme screw nut (for K2 models only) (2)
- = Ball screw nut (for all K2X models only)

5. Ordering stroke length (3)
04 = 4 inch
06 = 6 inch
08 = 8 inch
12 = 12 inch
18 = 18 inch
24 = 24 inch

6. Rear adapter orientation
blank = standard
R30 = 30 ° turned
R60 = 60 ° turned
R90 = 90 ° turned
R120 = 120 ° turned
R150 = 150 ° turned

1) Not possible with nut type BR
(2) An acme screw unit with long nut has the same retracted length (distance A) as a unit of the same stroke with a ball screw.
(3) Other stroke lengths possible on request, please contact customer support.

B-Track AC – Electrical Connections

Standard	
Actuator supply voltage [Vac]	
K2xxxxx115V	1 × 115
K2xxxxx230V	1 × 230

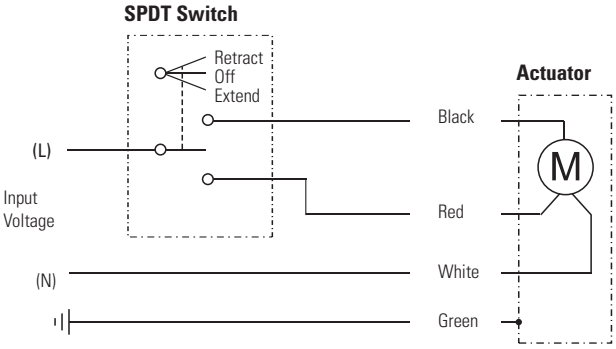

Connect white lead to neutral (N). To extend the actuator connect L to the red lead. To retract the actuator connect L to the black lead.

H-Track – Technical Features

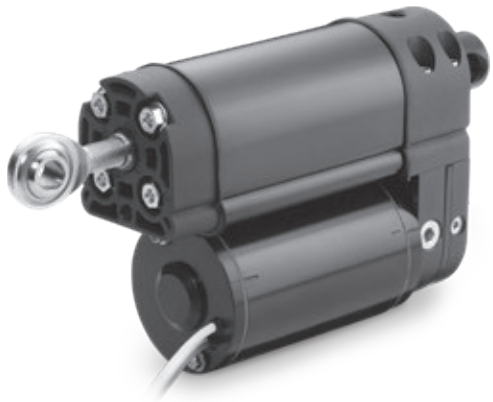

Standard Features

- Electro-hydraulic actuator combining the best from the hydraulic and electric worlds.
- Integrated electrically powered power pack consisting of a hydraulic pump, valves and a fluid reservoir.
- Robust hydraulic cylinder with a solid extension tube allowing for increased resistance to buckling.
- High power density.
- Very compact and short pin-to-pin versus stroke length relationship.
- Immune to vibrational drifting and hydraulically self-locks.
- High shock load and vibration resistance.
- Fluid reservoir is vented and isolated from the atmosphere with a flexible lid, allowing actuator and pump operation in any orientation without entraining or cavitation.
- Standard strokes up to 12 in (300 mm).
- Designed for harsh outdoor conditions.
- IP68 marine-grade option for both static and dynamic operation.
- Reliable and maintenance free.

General Specifications

Cylinder type	hydraulic
Pump type	internal electric gear pump
Manual override	yes
Anti-rotation	no
Motor protection	built-in auto reset thermal switch
Static load holding brake	no (self-locking)
Pressure relief valve	yes (for both directions)
Electrical connections Motor size 1 Motor size 2 Motor size 3	 flying leads + Packard 56 male connector flying leads + ring terminals flying leads + sealed IP67 rated Metri-pack 280 male connector
Compliance	CE, UKCA, RoHS, REACH, Prop65

Optional Mechanical Features

Mechanical options	IP68 marine-grade option
	Alternative front adapter ends
	Alternative rear adapter orientation

Compatible Controls

Contact customer support at www.thomsonlinear.com/cs

H-Track – Technical Specifications

Mechanical Specifications

Max. static compression load (Fx)	[lbf (N)]	5000 (22241)
Max. dynamic load (Fx)	[lbf (N)]	see page 162
Speed retract @ no load/max. load	[in/s (mm/s)]	see page 162
Speed extend @ no load/max. load	[in/s (mm/s)]	see page 162
Min. ordering stroke (S) length	[in]	2
Max. ordering stroke (S) length	[in]	12
Ordering stroke length increments	[in]	2
Operating temperature limits (1) (2)	[F (°C)]	- 20 – 150 (- 26 – 65)
Full load duty cycle @ 25 °C (77 °F)	[%]	25
End play, maximum	[in (mm]	0.015 (0.4)
Restraining torque	[lb-in (Nm)]	0.89 (0.1)
Standard protection class - static		IP67/IP69K
Standard protection class - dynamic		IP65
Optional marine grade protection class - static and dynamic (3)		IP68
Salt spray resistance (4)	[h]	2000
Weight	[lb (kg)]	see page 161

1) Other limits possible, contact Thomson customer support for information.
2) H-Track can withstand air temperatures below the freezing point but must be protected from freezing while submerged in water.
3) Tested for 650 hours of submerged operation up to a depth of 2 meters (79 in) at rated duty cycle.
4) Tested per ASTM B117 salt fog exposure for a duration of 2000 hours with no loss of sealing, no water ingress, and full functional performance throughout the test.

Electrical Specifications

Available input voltages	[Vdc]	12, 24
Input voltage tolerance 12 Vdc models 24 Vdc models	[Vdc]	 9 – 16 18 – 32
Current draw min/max	[A]	see page 162
Motor leads cross section Motor size 1 and 3 Motor size 2	[AWG (mm^2)]	 14 (2) 12 (3)
Motor ring terminals cross section Motor size 1 and 3 Motor size 2	[AWG (mm^2)]	 - 10
Motor lead length, standard	[in (mm)]	10 (254)

H-Track – Dimensions

Dimensions	Projection
inch [mm]	

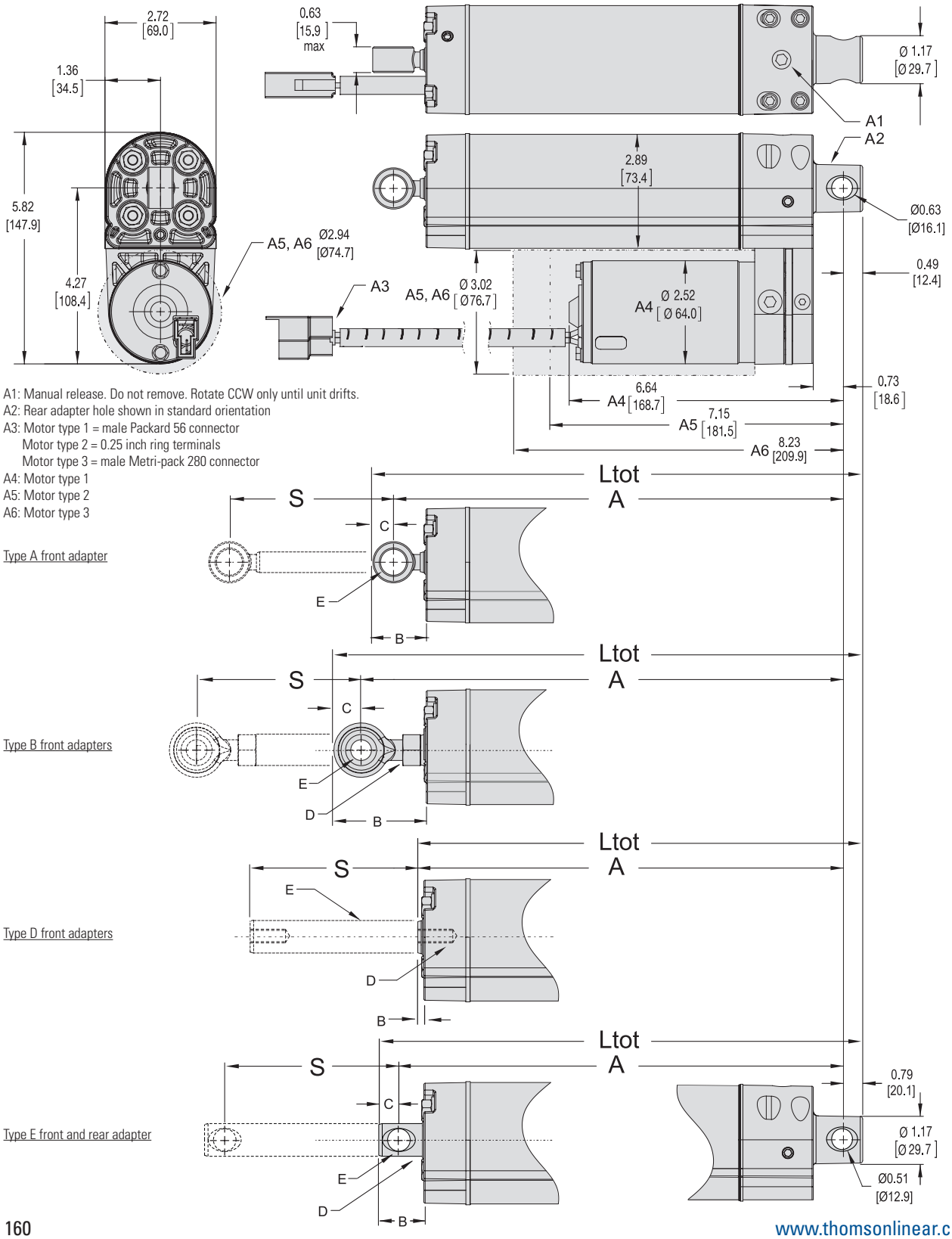

A1: Manual release. Do not remove. Rotate CCW only until unit drifts.
A2: Rear adapter hole shown in standard orientation
A3: Motor type 1 = male Packard 56 connector
Motor type 2 = 0.25 inch ring terminals
Motor type 3 = male Metri-pack 280 connector
A4: Motor type 1
A5: Motor type 2
A6: Motor type 3

Type A front adapter

Type B front adapters

Type D front adapters

Type E front and rear adapter

H-Track – Dimensions and Weight

Dimensions

Front Adapter	Type A	Type B	Type D	Type E
Standard Ordering Strokes (S) [in]	2, 4, 6, 8, 10, 12			
Total Length (Ltot) [in]	Ltot = A + C + 0.49	Ltot = A + C + 0.49	Ltot = A + 0.49	Ltot = A + 0.46
Retracted Length (A) [in]				
Bore Size H2	A = S + 4.8	A = S + 5.4	A = S + 4.2	-
Bore Size H3	A = S + 4.8	A = S + 5.7	A = S + 4.2	A = S + 4.7
Dimension B [in]				
Bore Size H2	1.31	1.66	0.14	-
Bore Size H3	1.31	1.89	0.14	1.03
Dimension C [in]				
Bore Size H2	0.52	0.56	-	-
Bore Size H3	0.52	0.66	-	0.46
Dimension D [in]				
Bore Size H2	-	7/16-20 THREADS	7/16-20 THREADS	-
Bore Size H3	-	1/2-20 THREADS	1/2-20 THREADS	Ø 0.75
Dimension E [in]				
Bore Size H2	Ø 0.631	Ø 0.44 THRU	Ø 0.625	-
Bore Size H3	Ø 0.631	Ø 0.50 THRU	Ø 0.750	Ø 0.51

Actuator Weight [lb (kg)]

Actuator Type	Ordering Stroke (S) [in]					
	2	4	6	8	10	12
H2x-xx-1	6.9 (3.1)	7.8 (3.5)	8.7 (3.9)	9.6 (4.4)	10.5 (4.8)	11.4 (5.2)
H3x-xx-1	7.1 (3.2)	8.2 (3.7)	9.3 (4.2)	10.4 (4.7)	11.5 (5.2)	12.6 (5.7)
H2x-xx-2	8.5 (3.9)	9.4 (4.3)	10.3 (4.7)	11.2 (5.1)	12.1 (5.5)	13.0 (5.9)
H3x-xx-2	8.7 (3.9)	9.8 (4.4)	10.9 (4.9)	12.0 (5.4)	13.1 (5.9)	14.2 (6.4)
H2x-xx-3	9.3 (4.2)	10.2 (4.6)	11.1 (5.0)	12.0 (5.4)	12.9 (5.8)	13.9 (6.3)
H3x-xx-3	9.5 (4.3)	10.6 (4.8)	11.7 (5.3)	12.8 (5.8)	13.9 (6.3)	15.0 (6.8)

H-Track – Performance Matrix

There are three main types of load configurations (N,C and H), which will determine the performance of the H-Track and how to interpret the below table. See the next page for information on the configurations and their effects.

Performance Matrix [1]

Model	Max. Dynamic Load [lbf (N)]		Extend Speed [in/s (mm/s)]		Retract Speed [in/s (mm/s)]		Current Draw [A] [2]			
	Extending	Retracting	@ No. Load	@ Max. Load	@ No. Load	@ Max. Load	12 Vdc Input Voltage		24 Vdc Input Voltage	
							Max.	Min.	Max.	Min.
Motor Type 1 (standard 2.5 inch diameter motor)										
H2x-xx-1B42	950	750	1.90	0.53	2.29	0.64	42	8	22	5
H3x-xx-1B43	1100	825	1.60	0.47	2.00	0.59	42	8	22	5
H2x-xx-1B22	1400	1100	1.20	0.34	1.45	0.41	42	8	22	5
H3x-xx-1B23	1750	1300	1.00	0.29	1.25	0.36	42	8	22	5
H2x-xx-1B02	2400	1750	0.50	0.15	0.60	0.18	42	8	22	5
H3x-xx-1B03	3200	2400	0.45	0.13	0.56	0.16	42	8	22	5
Motor Type 2 (standard 3 inch diameter motor)										
H2x-xx-2B42	1425	1131	1.90	0.53	2.29	0.64	80	14	43	10
H3x-xx-2B43	1650	1238	1.60	0.47	2.00	0.59	80	14	43	10
H2x-xx-2B22	2100	1666	1.20	0.34	1.45	0.41	80	14	43	10
H3x-xx-2B23	2625	1969	1.00	0.29	1.25	0.36	80	14	43	10
H2x-xx-2B02	3750	2975	0.50	0.15	0.60	0.18	80	14	43	10
H3x-xx-2B03	4800	3600	0.45	0.13	0.56	0.16	80	14	43	10
Motor Type 3 (marine grade motor)										
H2x-12-3B42	1425	625	1.25	0.35	1.51	0.42	30	4	-	-
H3x-12-3B43	1650	684	1.05	0.31	1.32	0.39	30	4	-	-
H2x-12-3B22	2100	920	0.90	0.26	1.09	0.31	30	4	-	-
H3x-12-3B23	2625	1088	0.75	0.22	0.94	0.27	30	4	-	-
H2x-12-3B02	3750	1450	0.65	0.31	0.81	0.38	30	4	-	-
H3x-12-3B03	4800	1675	0.55	0.26	0.71	0.34	30	4	-	-

1) The table above is valid for the temperature span of 40 – 120°F (4 – 50°C). H-Track can operate in the larger range of -20 – 150°F (-26 – 65°C), but at temperatures below 40°F (4°C), force and current begin to increase, while speed decreases. At temperatures above 120°F (50°C), speed will decrease slightly. The exact amount of performance change is difficult to calculate. Also, when it comes to the lower temperature span, the performance will move towards what is stated above as the temperature rises in the actuator due to the heat generated by its work. Please consult Thomson customer service for more information.

2) The current draw is not linear to the load but depends on and varies with the load configuration, direction of travel, ambient temperature, internal actuator temperature, and can not be easily determined for a specific situation. The above given max. and min. current draw is the highest respectively the lowest current draw you can expect during operation, and is what the power supply must be dimensioned for. Please consult Thomson customer service for more information.

H-Track – Load Configuration

Configuration N

The piston rod is not influenced by external loading, with no external force driving it in or out of the actuator. Current draws are at maximum extending or retracting when the resistive load is at the maximum stated value.

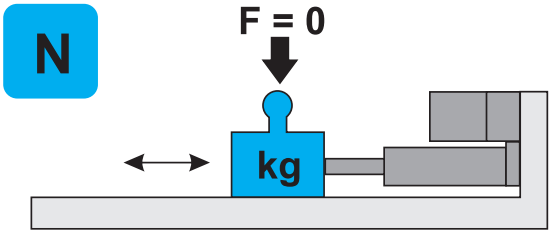

Configuration N: gravity does not affect the load in any direction.

Configuration C

External loading exerts a continuous force, driving the piston rod into the actuator. Current draws are at maximum while extending when opposing load is at maximum stated value. The current draw is between maximum and minimum while retracting the load. The current draw can be near the stated maximum value when retracting with no load.

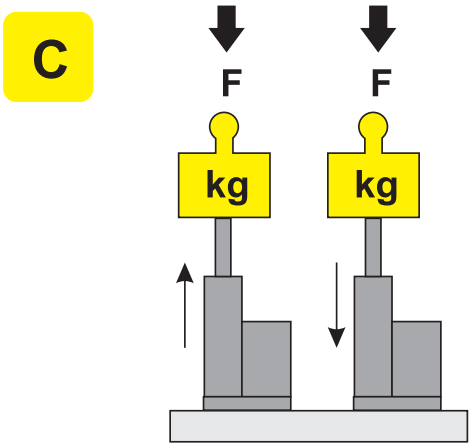

Configuration C: load is always acting to drive the piston rod into the actuator.

Configuration H

External loading exerts a continuous force, drawing the piston rod out of the actuator. Current draws are at maximum while retracting when the opposing load is at maximum stated value. Current draw is between maximum and minimum while extending a helping-load. Current draw can be near the stated maximum value when extending with no load.

<u>Caution:</u> proper selection of Load Configuration is critical. Improper selection can result in unexpected performance.

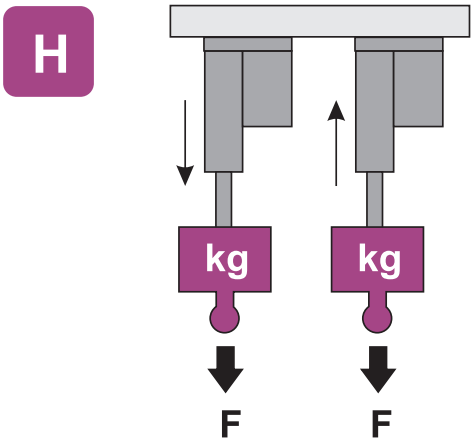

H-Track – Bore Size

The maximum load in each direction and the required stroke length determine the minimum bore size needed for the actuator, which in turn, governs the piston diameter of the actuator.

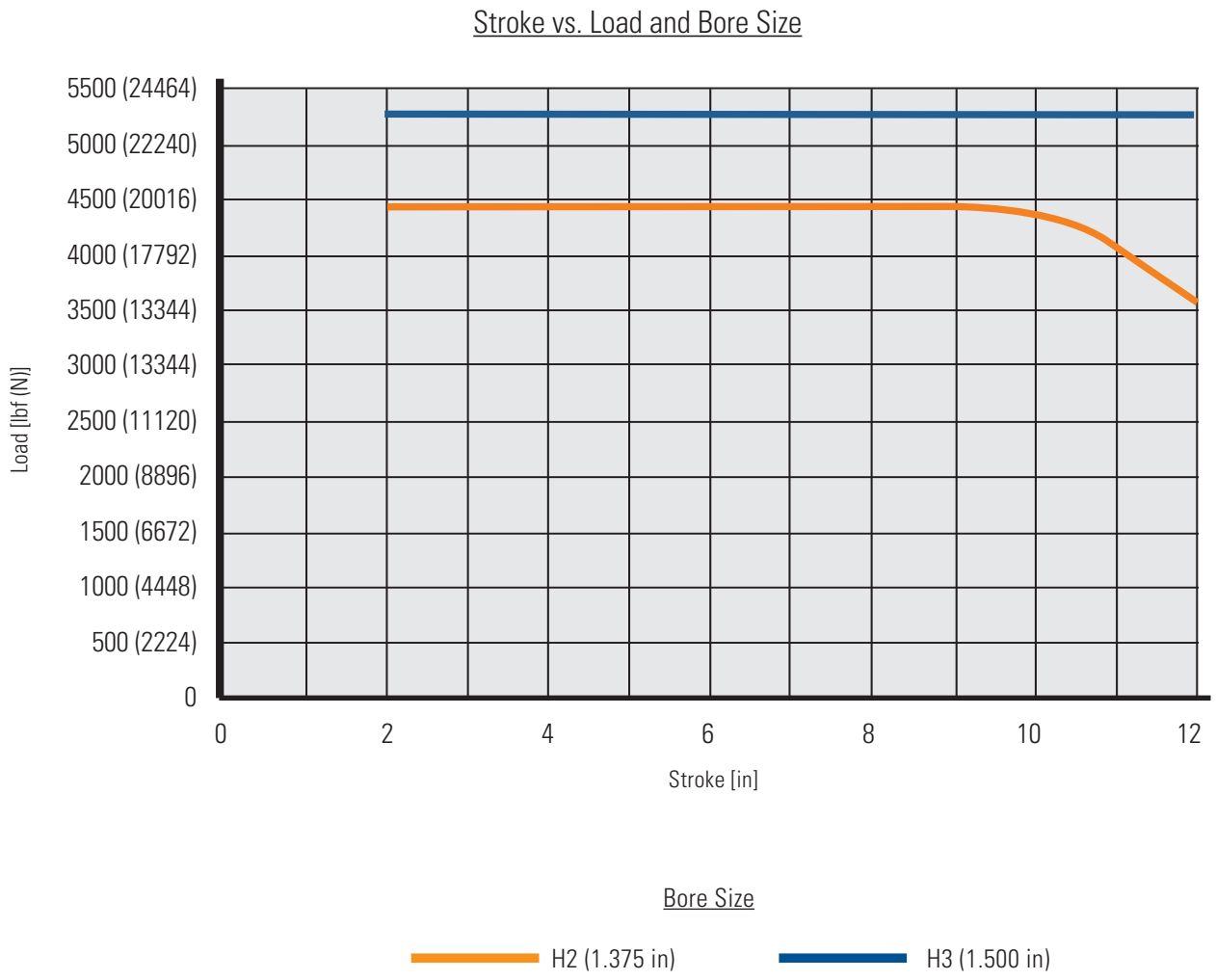

H-Track – Motor and Pump Performance

Motor Type 1 - Load vs. Speed @ Extension / Retraction

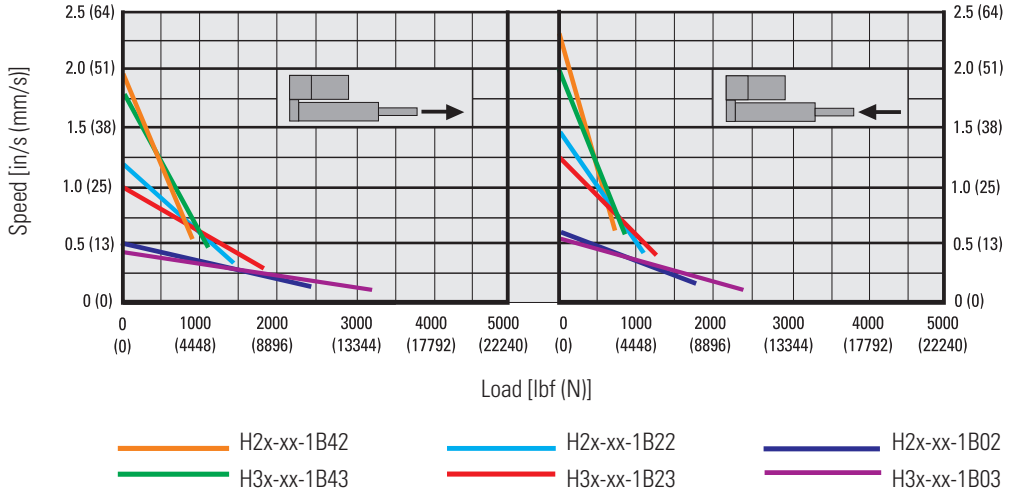

Motor Type 2 - Load vs. Speed @ Extension / Retraction

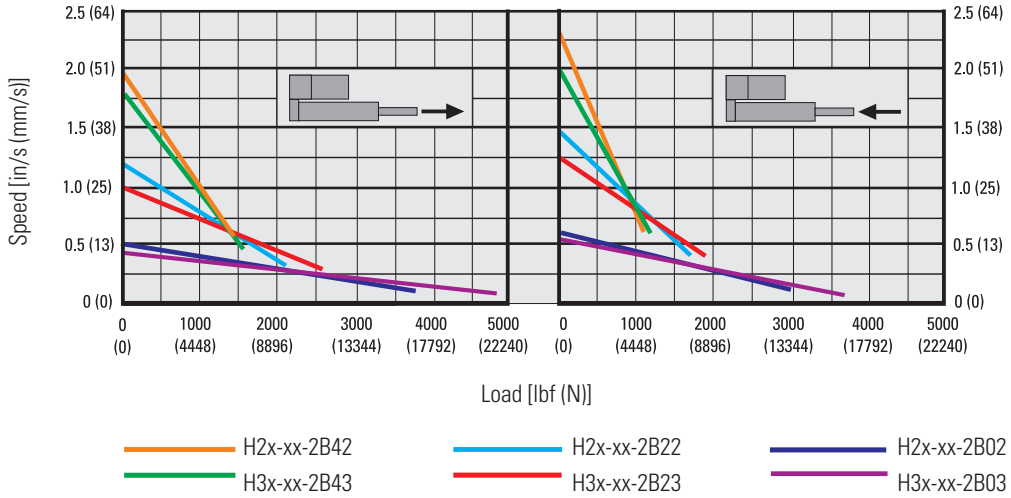

Motor Type 3 - Load vs. Speed @ Extension / Retraction

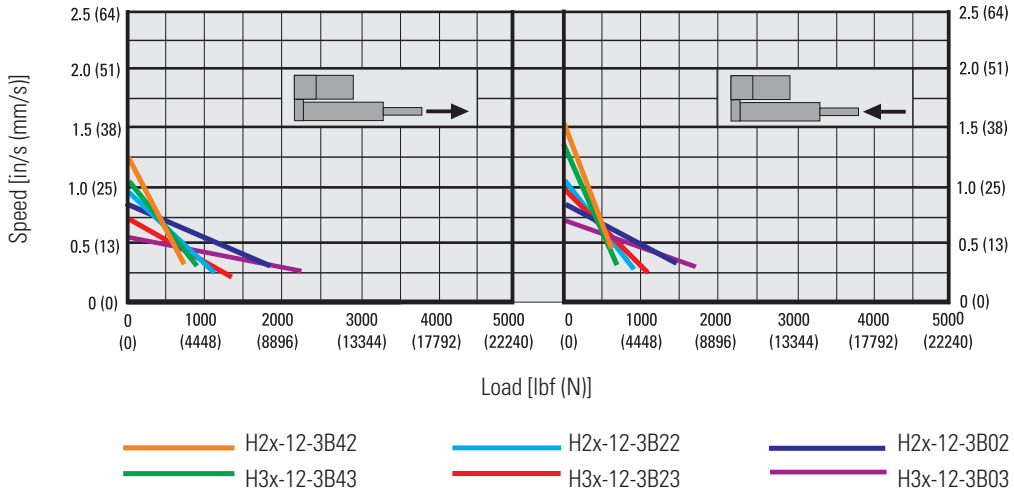

H-Track – Sizing and Selection

In order to choose the optimal H-Track actuator for your application, please follow the sizing and selection process as described below. Do not hesitate to contact Thomson customer support if you need assistance.

Step 1. Collect the Necessary Application Data

In the following example, the application requirements are:

Stroke:	12 in
Max. load @ extension:	3750 lbf
Max. load @ retraction:	750 lbf
Min. speed @ extension:	0.25 in/sec
Min. speed @ retraction:	0.6 in/sec
Protection class:	IP68
Type of load:	the load is pushed and pulled horizontally

Step 2. Bore and Piston Sizing

Determine the bore size (which also gives you the piston diameter) for your load and stroke. Also see page 164.

Example: As the application requires a 12-in stroke, that can handle 3750 lbf at extension (red dot) and 1000 lbf at retraction (yellow dot), then the Stroke vs. Load and Bore Size diagram below show, that only the blue curve is above both points. Therefore, bore size H3 is the only possible choice in this case (which also means the piston diameter will be 0.750 in).

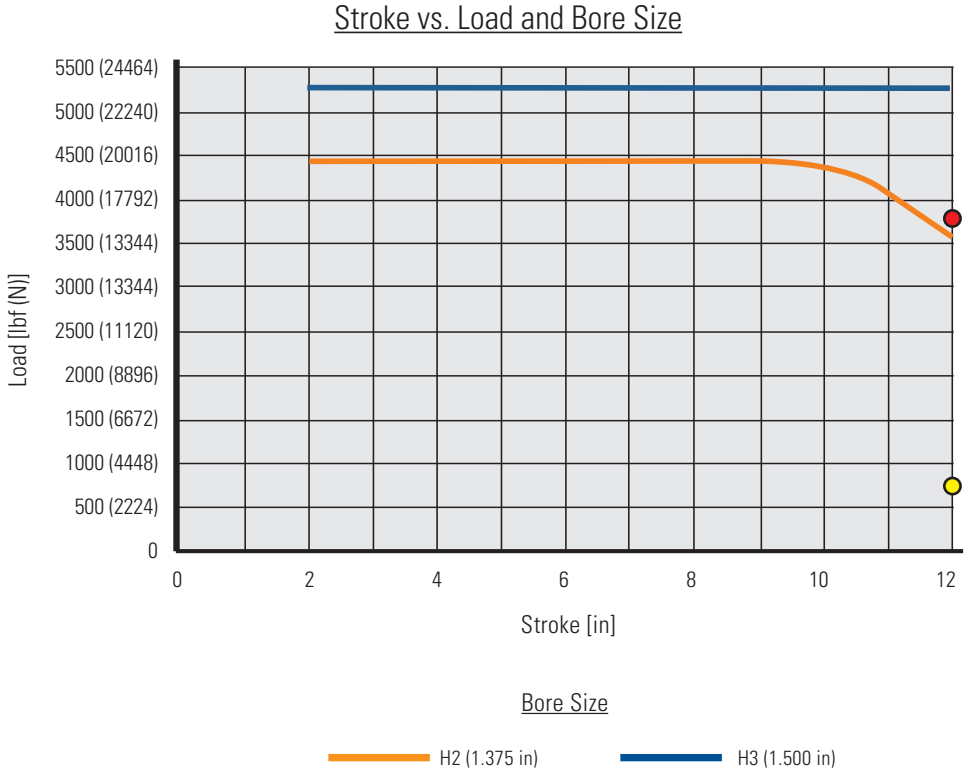

Step 3. Sizing of Motor and Pump

Determine the size of the motor and pump for your application using the performance diagrams on page 165.

Example: Since the application requires IP68 protection class, the only motor possible is type 3, which is only available with 12 Vdc input voltage. Next, placing the maximum extension (red arrow) and retraction loads (yellow arrow) for the application into the "Motor Type 3 - Load vs. Speed @ Extension / Retraction" diagram shows that there are two H3 bore size models capable of handling both the max. extension and retraction load (H3x-12-3B02 and H3x-12-3B03). However, while both models can move at the desired min. extension speed of 0.25 in/sec or faster (green arrow), only H3x-12-3B02 can move at 0.6 mm/s when retracting (blue arrow), making the ordering code at this stage read H3x-12-3B02-x-12x.

Motor Type 3 - Load vs. Speed @ Extension / Retraction

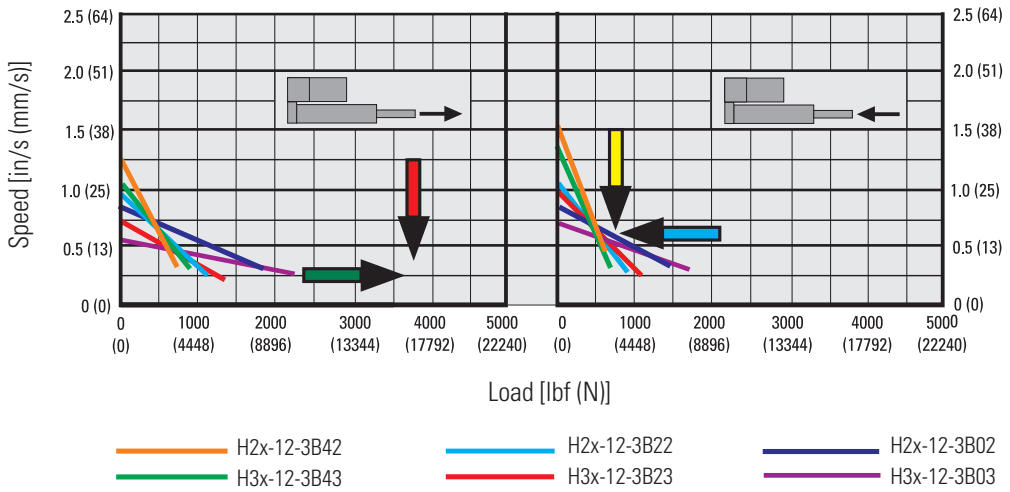

Step 4. Current Draw

The Performance Matrix on page 18 shows that model H3x-12-3B02 will draw up to 30 A and never less than 4 A. The power supply will need to be dimensioned accordingly.

Step 5. Load Configuration

Choosing the correct load configuartion for the actuator is critical for proper operation and will also determine the current consumption profile during operation. Also see page 163.

Example: Since the load is pushed and pulled horizontally, the corresponding load configuration is N, and the ordering code at this stage reads H3N-12-3B02-x-12x. Current draws will be at maximum extending or retracting when the opposing load is at the maximum stated value.

Step 6. Finishing the Ordering Code

In order to complete the ordering code, the type of piston rod front adapter and the rear adapter orientation need to be added to the code. Also see page 168.

Example: If we assume a standard front adapter and a 90° rear adapter orientation are required, the complete ordering code would be H3N-12-3B02-A-12R90.

H-Track – Ordering Key

Ordering Key

1	2	3	4	5	6	7	8	9
H2	**C-**	**12-**	**1**	**A2**	**2**	**-A**	**06**	

1. Bore size [1]
H2 = 1.375 in
H3 = 1.500 in

2. Load configuration [1]
N- = the piston rod is not influenced by external loading, with no external force driving it in or out of the actuator
C- = external loading exerts a continuous force, driving the piston rod into the actuator
H- = external loading exerts a continuous force, drawing the piston rod out of the actuator

3. Input voltage [1]
12- = 12 Vdc
24- = 24 Vdc

4. Motor size and protection class [1]
1 = 2.5 inch diameter, standard IP67/IP69K
2 = 3.0 inch diameter, standard IP67/IP69K
3 = 3.0 inch diameter, marine grade IP68 option [2]

5. Pump size [1]
B0 = 0.012 in^3/rev
B2 = 0.025 in^3/rev
B4 = 0.040 in^3/rev

6. Piston diameter
2 = 0.625 in (always with bore size H2)
3 = 0.750 in (always with bore size H3)

7. Adapter type
-A = Standard
-B = Spherical
-D = Female Thread
-E = Cross hole [3]

8. Stroke length [3]
02 = 2 in (50 mm)
04 = 4 in (100 mm)
06 = 6 in (150 mm)
08 = 8 in (200 mm)
10 = 10 in (254 mm)
12 = 12 in (300 mm)

9. Rear adapter orientation
blank = standard
R90 = 90° position

(1) See page 166 for sizing and selection guidelines
(2) Motor option 3 not available for 24 Vdc
(3) Cross hole not available with bore size H2 or motor type 2
(4) Other stroke lengths available upon request. Please contact customer support.

H-Track – Electrical Connections

Electrical Data		
Actuator supply voltage	[Vdc]	
Hxx-12		9 - 16
Hxx-24		18 - 32
Current draw @ no load/max. load	[A]	see matrix page 162

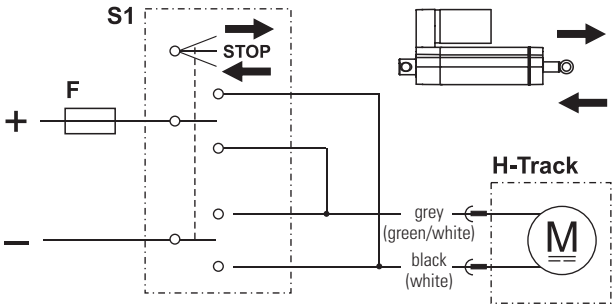

F Fuse
S1 Double pole double throw switch

To extend the actuator, apply +Vdc to black (white) and -Vdc to grey (green/white). To retract, apply -Vdc to black (white) and +Vdc to grey (green/white). Colors in between brackets are valid for motor size 2. Avoid running the actuator into the ends.

Electrak® 1 S – Technical Features

Standard Features

- Compact and lightweight
- Integrated end of stroke limit switches
- Corrosion resistant housing
- Self-locking acme screw drive system
- Maintenance free
- Ideal for replacement of comparable size pneumatic and hydraulic cylinders

General Specifications

Screw type	acme
Nut type	acme
Manual override	no
Anti-rotation	no
Static load holding brake	no (self-locking)
Safety features	end of stroke limit switches motor auto reset thermal switch
Electrical connections	flying leads with connector
Compliances	CE, UKCA

Compatible Controls

Contact customer support at www.thomsonlinear.com/cs

Electrak 1 S – Technical Specifications

Mechanical Specifications

Max. static load [1]	[N (lbf)]	1300 (300)
Max. dynamic load (Fx)	[N (lbf)]	
Sxx -09A04		110 (25)
Sxx -09A08		225 (50)
Sxx -17A08		340 (75)
Sxx -17A16		340 (75)
Speed @ no load/max. load	[mm/s (in/s)]	
Sxx -09A04		78/64 (3.1/2.5)
Sxx -09A08		39/29 1.5/1.1)
Sxx -17A08		21/16 (0.8/0.6)
Sxx -17A16		10/8 (0.4/0.3)
Min. ordering stroke (S) length	[in]	1
Max. ordering stroke (S) length	[in]	8
Ordering stroke length increments	[in]	1
Operating temperature limits	[°C (F)]	- 25 – 65 (- 13 – 150)
Full load duty cycle @ 25 °C (77 °F)	[%]	25
End play, maximum	[mm (in)]	0.9 (0.04)
Restraining torque	[Nm (lbf-in)]	2.3 (1.7)
Protection class - static		IP66
Salt spray resistance	[h]	96

(1) Max. static load at fully retracted stroke

Electrical Specifications

Available input voltages [1]	[Vdc]	12, 24
Input voltage tolerance	[%]	± 10
Current draw @ no load/max. load	[A]	
S12 -09A04		0.8/3.8
S12 -09A08		0.8/4.4
S12 -17A08		0.8/4.1
S12 -17A16		0.8/3.8
S24 -09A04		0.4/1.6
S24 -09A08		0.4/2.0
S24 -17A08		0.4/1.9
S24 -17A16		0.4/1.6
Motor leads length	[mm (in)]	100 (4)
Motor leads cross section	[mm^2 (AWG)]	1 (18)

Electrak® 1 S – Dimensions

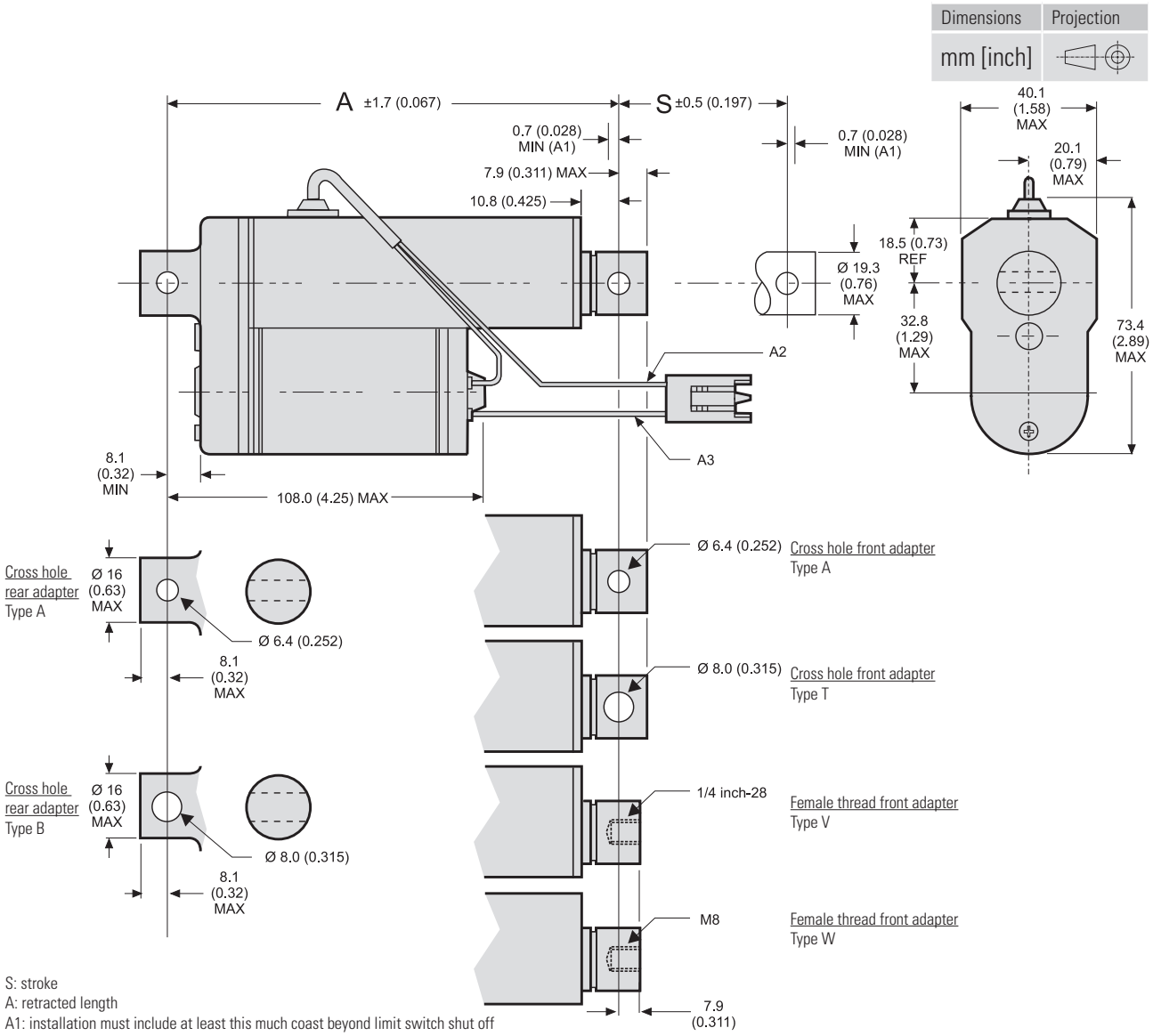

S: stroke
A: retracted length
A1: installation must include at least this much coast beyond limit switch shut off
A2: black lead for 12 Vdc units, white lead for 24 Vdc units
A3: yellow lead

Stroke, Retracted Length and Weight Relationships

Ordering stroke (S)	[in]	1	2	3	4	5	6	8
Electrical stroke*	[mm]	21	46	72	97	122	148	199
	[in]	0.82	1.82	2.82	3.82	4.82	5.82	7.82
Retracted length (A)	[mm]	135	160	185	211	236	262	312
	[in]	5.3	6.3	7.3	8.3	9.3	10.3	12.3
Weight	[kg]	0.52	0.54	0.60	0.64	0.66	0.68	0.74
	[lbs]	1.15	1.20	1.35	1.40	1.45	1.50	1.60

* The electrical stroke occurs when the internal limit switches switch off the power to the motor. The installation then must allow the extension tube to coast at least 0.7 mm (0.028 in) beyond that position before it becomes mechanically blocked to travel any further (distance A1). If there is no mechanical block, the extension tube coasting distance will depend on the load. No load means the longest coasting distance while the distance becomes shorter as the load becomes higher. The exact coasting distance depends on the load, in which direction the load acts (push or pull), the mounting orientation of the actuator, and any added friction to the system by guides or other installations, and has to be determined on a case-by-case basis.

Electrak 1 S – Performance Diagrams

Speed and Current vs. Load 12 Vdc Models

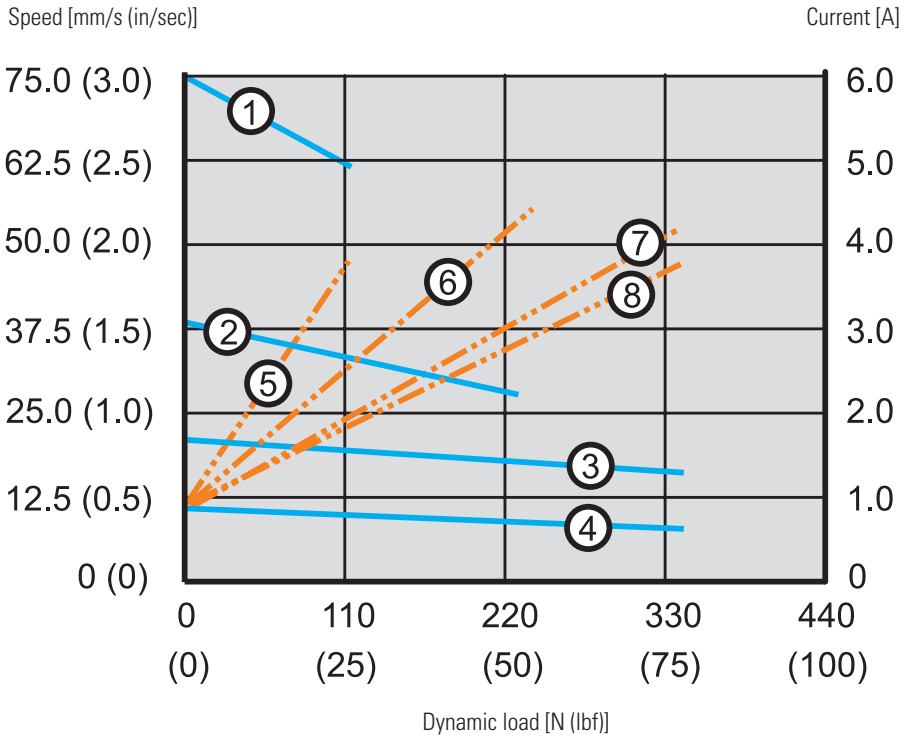

Speed
1: S12-09A04 (110 N (25 lbf))
2: S12-09A08 (225 N (50 lbf))
3: S12-17A08 (340 N (75 lbf))
4: S12-17A16 (340 N (75 lbf))

Current
5: S12-09A04 (110 N (25 lbf))
6: S12-09A08 (225 N (50 lbf))
7: S12-17A08 (340 N (75 lbf))
8: S12-17A16 (340 N (75 lbf))

Speed and Current vs. Load 24 Vdc Models

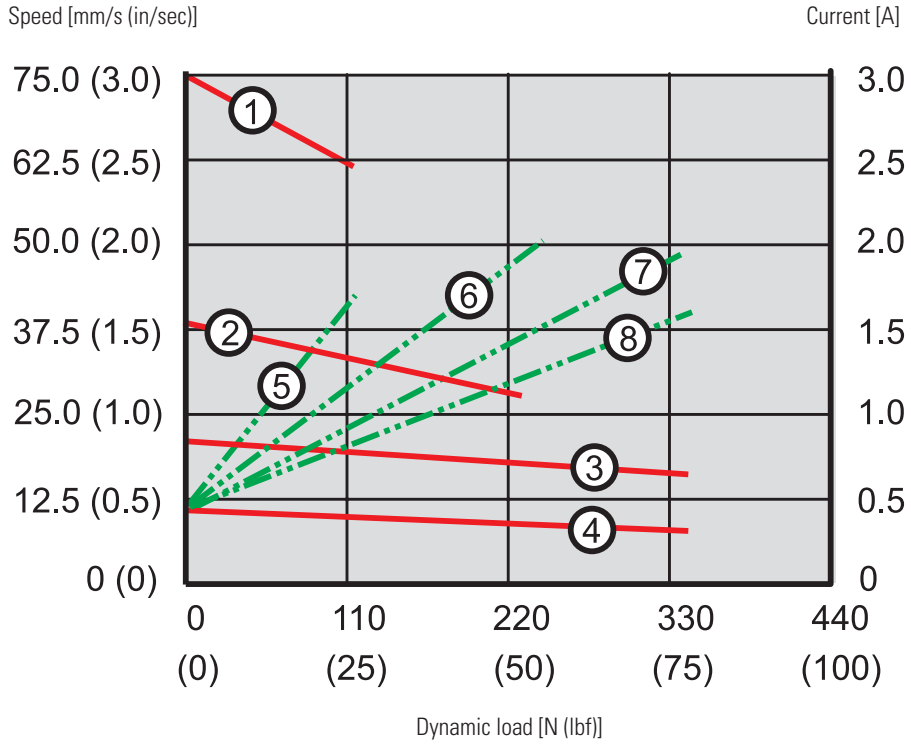

Speed
1: S24-09A04 (110 N (25 lbf))
2: S24-09A08 (225 N (50 lbf))
3: S24-17A08 (340 N (75 lbf))
4: S24-17A16 (340 N (75 lbf))

Current
5: S24-09A04 (110 N (25 lbf))
6: S24-09A08 (225 N (50 lbf))
7: S24-17A08 (340 N (75 lbf))
8: S24-17A16 (340 N (75 lbf))

Electrak® 1 S – Ordering Key

Ordering Key

1	2	3	4	5	6	7
S12	**C**	**09A04-**	**04**	**-C**	**A**	**A**

1. Model and input voltage
S12 = Electrak 1, 12 Vdc
S24 = Electrak 1, 24 Vdc

2. CE compliance
N = no
C = yes

3. Dynamic load capacity, screw type and maximum speed
09A04- = 110 N (25 lbf), acme, 75 mm/s (3 in/s)
09A08- = 225 N (50 lbf), acme, 45 mm/s (1,8 in/s)
17A08- = 340 N (75 lbf), acme, 26 mm/s (1 in/s)
17A16- = 340 N (75 lbf), acme, 16 mm/s (0,6 in/s) (1)

4. Ordering stroke length
01 = 0.82 inch (21 mm)
02 = 1.82 inch (46 mm)
03 = 2.82 inch (72 mm)
04 = 3.82 inch (97 mm)
05 = 4.82 inch(122 mm)
06 = 5.82 inch (148 mm)
08 = 7.82 inch (199 mm)

5. Connector option
-C = Packard Electric Pac-Con
-I = AMP Superseal 2 pin

6. Front adapter option
A = Cross hole 0.25 inch
T = Cross hole 8 mm
V = Female thread 1/4 inch-28
W = Female thread M8

7. Rear adapter option
A = Cross hole 0.25 inch
B = Cross hole 8 mm

(1) Not possible in combination with 8 inch stroke.

Electrak 1 S – Electrical Connections

Standard	
Actuator supply voltage [Vdc]	
S12	12
S24	24

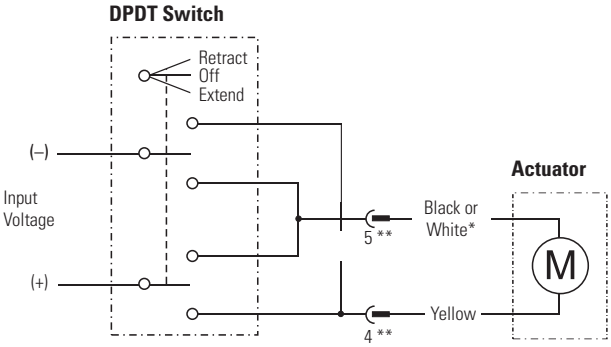

* Black for 12 Vdc supply voltage
White for 24 Vdc supply voltage
** If equipped with AMP Superseal connector

Connect the yellow lead (pin 4 if connector) to positive and black or white (pin 5 if connector) to negative to extend the actuator. Change polarity to retract the actuator. The actuator should be protected from overload conditions by a customer-provided fuse in the circuit (6 A for 12 Vdc and 3 A for 24 Vdc).

Electrak® 1 SP – Technical Features

Standard Features

- Compact and lightweight
- Integrated 10 kOhm potentiometer feedback
- Corrosion resistant housing
- Self-locking acme screw drive system
- Maintenance free
- Internally restrained extension tube
- Ideal for replacement of comparable size pneumatic and hydraulic cylinders

General Specifications

Screw type	acme
Nut type	acme
Manual override	no
Anti-rotation	no
Static load holding brake	no (self-locking)
Safety features	motor auto reset thermal switch
Electrical connections	flying leads with connector to the motor, cable with flying leads to the potentiometer
Compliances	CE, UKCA

Compatible Controls

Contact customer support at www.thomsonlinear.com/cs

Electrak 1 SP– Technical Specifications

Mechanical Specifications

Max. static load [1]	[N (lbf)]	1300 (300)
Max. dynamic load (Fx)	[N (lbf)]	
SPxx -09A04		110 (25)
SPxx -09A08		225 (50)
SPxx -17A08		340 (75)
SPxx -17A16		340 (75)
Speed @ no load/max. load	[mm/s (in/s)]	
SPxx -09A04		78/64 (3.1/2.5)
SPxx -09A08		39/29 1.5/1.1)
SPxx -17A08		21/16 (0.8/0.6)
SPxx -17A16		10/8 (0.4/0.3)
Min. ordering stroke (S) length	[in]	1
Max. ordering stroke (S) length	[in]	8
Ordering stroke length increments	[in]	1
Operating temperature limits	[°C (F)]	- 25 – 65 (- 13 – 150)
Full load duty cycle @ 25 °C (77 °F)	[%]	25
End play, maximum	[mm (in)]	0.9 (0.04)
Restraining torque	[Nm (lbf-in)]	2.3 (1.7)
Protection class - static		IP66
Salt spray resistance	[h]	96

(1) Max. static load at fully retracted stroke

Electrical Specifications

Available input voltages [1]	[Vdc]	12, 24
Input voltage tolerance	[%]	± 10
Current draw @ no load/max. load	[A]	
SP12 -09A04		0.8/3.8
SP12 -09A08		0.8/4.4
SP12 -17A08		0.8/4.1
SP12 -17A16		0.8/3.8
SP24 -09A04		0.4/1.6
SP24 -09A08		0.4/2.0
SP24 -17A08		0.4/1.9
SP24 -17A16		0.4/1.6
Motor leads length	[mm (in)]	100 (4)
Motor leads cross section	[mm^2 (AWG)]	1 (18)
Potentiometer cable length	[mm (in)]	635 (25)
Potentiometer cable diameter	[mm (in)]	5 (0.2)
Pot. cable leads cross section	[mm^2 (AWG)]	0.5 (20)

Electrak® 1 SP – Dimensions

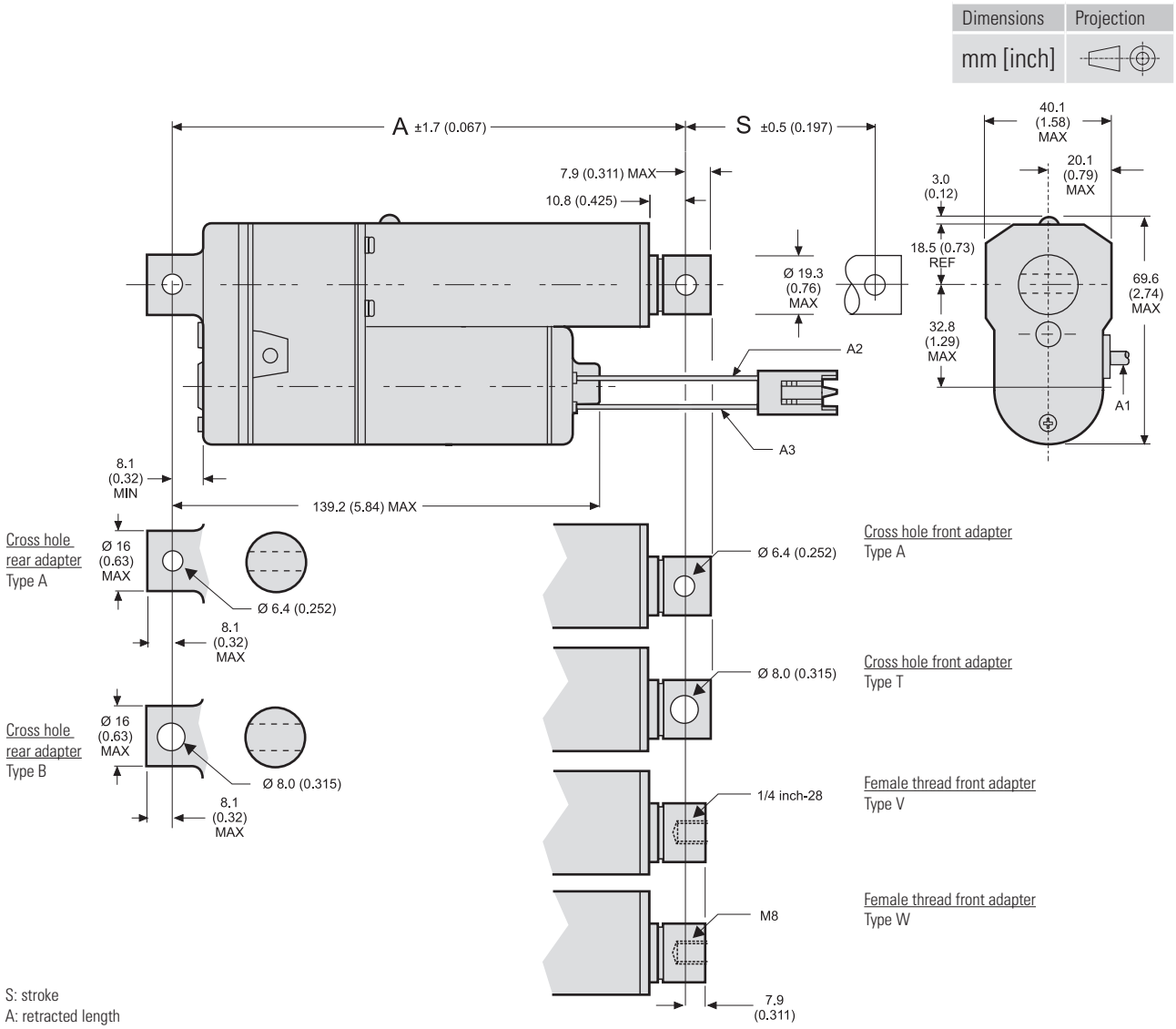

S: stroke
A: retracted length
A1: cable for potentiometer feedback, length = 635 mm (25 inch)
A2: black lead for 12 Vdc units, white lead for 24 Vdc units
A3: yellow lead

Stroke, Retracted Length and Weight Relationships

Ordering stroke	[in]	1	2	3	4	5	6*	8
Actual max. stroke (S)	[mm]	30.4	58.7	86.8	115.1	143.2	171.5	227.9
	[in]	1.2	2.3	3.5	4.6	5.8	6.9	9.2
Retracted length (A)	[mm]	170	198	226	254	282	310	366
	[in]	6.7	7.8	8.9	10.0	11.1	12.2	14.4
Weight	[kg]	0.50	0.55	0.60	0.65	0.70	0.75	0.85
	[lbs]	1.1	1.2	1.3	1.4	1.5	1.6	1.8

* Six + inch length not possible for SPxx-17A16

Electrak 1 SP – Performance Diagrams

Speed and Current vs. Load 12 Vdc Models

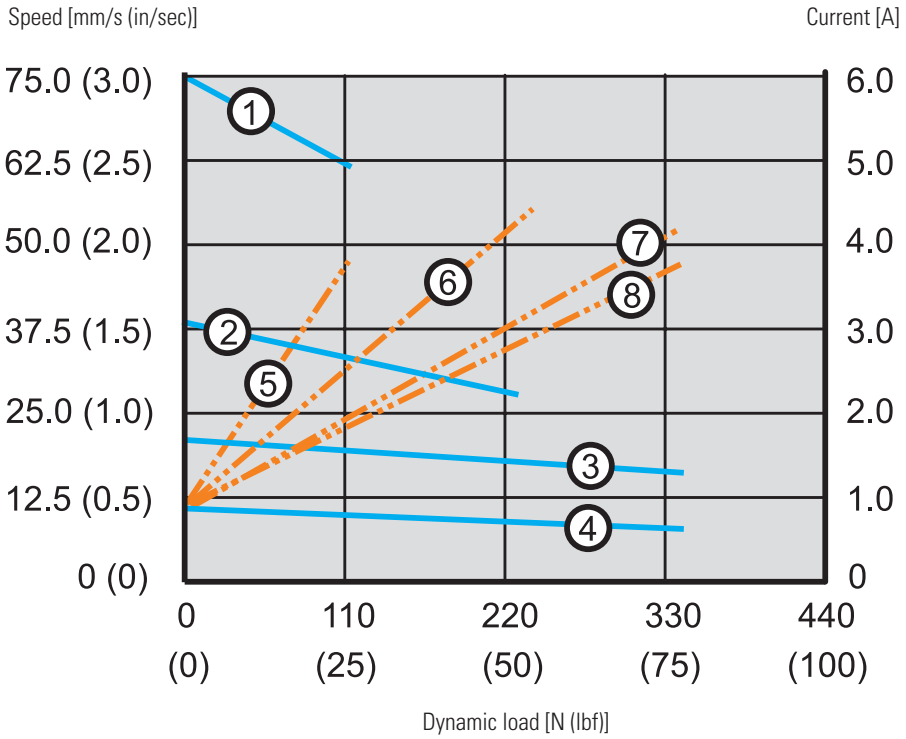

Speed
1: SP12-09A04 (110 N (25 lbf))
2: SP12-09A08 (225 N (50 lbf))
3: SP12-17A08 (340 N (75 lbf))
4: SP12-17A16 (340 N (75 lbf))

Current
5: SP12-09A04 (110 N (25 lbf))
6: SP12-09A08 (225 N (50 lbf))
7: SP12-17A08 (340 N (75 lbf))
8: SP12-17A16 (340 N (75 lbf))

Speed and Current vs. Load 24 Vdc Models

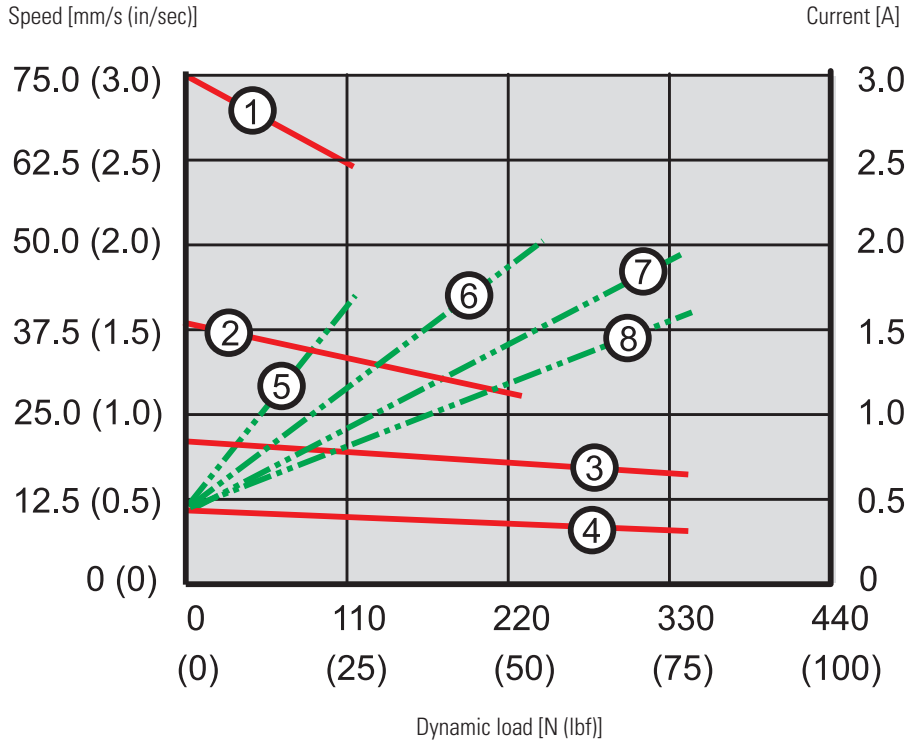

Speed
1: SP24-09A04 (110 N (25 lbf))
2: SP24-09A08 (225 N (50 lbf))
3: SP24-17A08 (340 N (75 lbf))
4: SP24-17A16 (340 N (75 lbf))

Current
5: SP24-09A04 (110 N (25 lbf))
6: SP24-09A08 (225 N (50 lbf))
7: SP24-17A08 (340 N (75 lbf))
8: SP24-17A16 (340 N (75 lbf))

Electrak® 1 SP – Ordering Key

Ordering Key

1	2	3	4	5	6	7
SP12	**C**	**09A04-**	**04**	**-C**	**A**	**A**

1. Model and input voltage
SP12 = Electrak 1, potentiometer feedback, 12 Vdc
SP24 = Electrak 1, potentiometer feedback, 24 Vdc

2. CE compliance
N = no
C = yes

3. Dynamic load capacity, screw type and maximum speed
09A04- = 110 N (25 lbf), acme, 75 mm/s (3 in/s)
09A08- = 225 N (50 lbf), acme, 45 mm/s (1,8 in/s)
17A08- = 340 N (75 lbf), acme, 26 mm/s (1 in/s)
17A16- = 340 N (75 lbf), acme, 16 mm/s (0,6 in/s) (1)

4. Ordering stroke length
01 = 1.2 inch (30.4 mm)
02 = 2.3 inch (58.7 mm)
03 = 3.5 inch (86.8 mm)
04 = 4.6 inch (115.1 mm)
05 = 5.8 inch(143.2 mm)
06 = 6.9 inch (171.5 mm)
08 = 9.2 inch (227.9 mm)

5. Connector option
-C = Packard Electric Pac-Con
-J = AMP Superseal 5 pin

6. Front adapter option
A = Cross hole 0.25 inch
T = Cross hole 8 mm
V = Female thread 1/4 inch-28
W = Female thread M8

7. Rear adapter option
A = Cross hole 0.25 inch
B = Cross hole 8 mm

(1) Not possible in combination with 6 or 8 inch stroke.

Electrak 1 SP – Electrical Connections

Standard		
Actuator supply voltage SP12 SP24	[Vdc]	 12 24
Potentiometer type		wire-wound
Potentiometer resistance	[kOhm]	10
Potentiometer max. input voltage	[Vdc]	32
Potentiometer max. power	[W]	1.5
Resistance tolerance	[%]	5
Potentiometer linearity	[%]	± 0.25
Potentiometer output resolution SPxxxxxxxx01(02) SPxxxxxA04(08)03(04) SPxxxxxA1603(04, 05) SPxxxxxA04(08)05(06, 08)	[ohm/mm]	 94.5 47.2 63.0 31.5

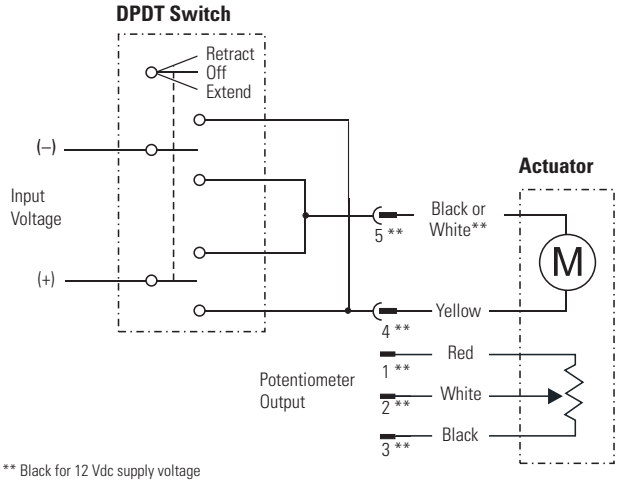

** Black for 12 Vdc supply voltage
White for 24 Vdc supply voltage
** If equipped with AMP Superseal connector

Connect the yellow lead (pin 4 if connector) to positive and black or white (pin 5 if connector) to negative to extend the actuator. Change polarity to retract the actuator. The potentiometer output has 0 ohm between white (pin 2 if connector) and red (pin 1 if connector) when the actuator is fully retracted. The actuator should be protected from overload conditions by a customer-provided fuse in the circuit (6 A for 12 Vdc and 3 A for 24 Vdc).

M-Track – Technical Features

Standard Features

- Compact and lightweight
- Corrosion resistant housing
- Self-locking acme screw drive system
- Integrated standard end-of-stroke limit switches
- Optional analog potentiometer feedback
- Stroke up to 12 inches
- Maintenance free
- Internally restrained extension tube
- Typical applications are ventilation and valve adjustment, vise or clamp operation or light weight positioning of lifts and tilts.

General Specifications

Screw type	acme
Nut type	acme
Manual override	no
Anti-rotation	yes
Static load holding brake	no (self-locking)
Safety features	motor auto reset thermal switch internal end-of-stroke limit switches
Electrical connections	cable with connector for units without option potentiometer, cable with flying leads if potentiometer
Compliances	CE, UKCA

Accessories

Protective boot (contact customer support for more information)

Compatible Controls

Contact customer support at www.thomsonlinear.com/cs

M-Track – Technical Specifications

Mechanical Specifications

Max. static load [1]	[N (lbf)]	1300 (300)
Max. dynamic load (Fx)	[N (lbf)]	
M1-D0xx-0025		111 (25)
M1-D0xx-0050		222 (50)
M1-D0xx-0100		445 (100)
M1-D0xx-0165		734 (165)
Speed @ max. load	[mm/s (in/s)]	
M1-D0xx-0025		45 (1.75)
M1-D0xx-0050		20 (0.80)
M1-D0xx-0100		11 (0.45)
M1-D0xx-0165		6 (0.25)
Min. ordering stroke (S) length	[in]	1
Max. ordering stroke (S) length	[in]	12
Ordering stroke length increments	[in]	1
Operating temperature limits	[°C (F)]	- 25 – 65 (- 13 – 150)
Full load duty cycle @ 25 °C (77 °F)	[%]	25
End play, maximum	[mm (in)]	0.9 (0.04)
Restraining torque	[Nm (lbf-in)]	0
Protection class - static / dynamic		IP69K / IP65
Salt spray resistance	[h]	96

(1) Max. static load at fully retracted stroke
(2) Delphi Packard male connector 8911773 body

Electrical Specifications

Available input voltages[1]	[Vdc]	12, 24
Input voltage tolerance	[%]	± 10
Current draw @ no load/max. load	[A]	
M1-D012-0025		0.9/2.0
M1-D012-0050		0.6/2.5
M1-D012-0100		0.9/4.4
M1-D012-0165		0.7/3.4
M1-D024-0025		0.5/1.0
M1-D024-0050		0.3/1.3
M1-D024-0100		0.5/2.2
M1-D024-0165		0.4/1.1
Cable connector	[mm (in)]	
Without potentiometer option		Delphi Packard [2]
With potentiometer option		-
Cable length	[mm (in)]	
Without potentiometer option		330 (13)
With potentiometer option		304 (12)
Cable leads cross section	[mm^2 (AWG)]	
Power supply leads		0.75 (18)
Potentiometer leads		0.26 (26)
Cable diameter	[mm (in)]	7.8 (0.31)

M-Track – Dimensions

Dimensions	Projection
mm [inch]	

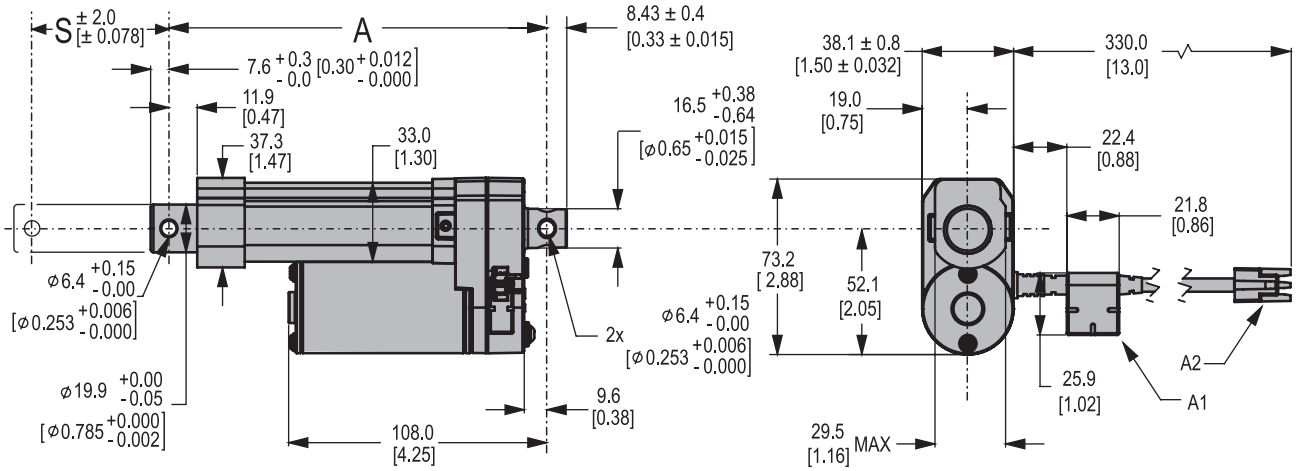

S: stroke
A: retracted length
A1: EMC filter
A2: 330 mm long cable with connector if no potentiometer, 304 mm long cable with no connector if potentiometer.

Stroke, Retracted and Cover Tube Length and Weight Relationships

Ordering stroke (S)	[in]	1	2	3	4	5	6	7	8	9	10	11	12
Retracted length (A) without potentiometer	[mm]	132.6	158.0	183.4	209.0	234.4	260.1	285.5	310.9	336.6	362.0	387.4	413.0
	[in]	5.22	6.22	7.22	8.23	9.23	10.24	11.24	12.24	13.25	14.25	15.25	16.26
Retracted length (A) with potentiometer*	[mm]	-	191.8	217.7	243.1	268.5	293.9	319.5	344.9	370.3	395.7	421.1	446.5
	[in]	-	7.55	8.57	9.57	10.57	11.57	12.58	13.58	14.58	15.58	16.58	17.58
Weight without potentiometer	[kg]	0.50	0.58	0.66	0.75	0.83	0.91	0.99	1.07	1.15	1.24	1.32	1.40
	[lbs]	1.105	1.285	1.465	1.645	1.825	2.005	2.185	2.365	2.545	2.725	2.905	3.085
Weight with potentiometer	[kg]	-	0.66	0.75	0.83	0.91	0.99	1.07	1.15	1.24	1.32	1.40	1.48
	[lbs]	-	1.465	1.645	1.825	2.005	2.185	2.365	2.545	2.725	2.905	3.085	3.265

* The extra retracted length added to a potentiometer model is only added to the cover tube length and not to the front or rear housings.

M-Track – Performance Diagrams

Speed and Current vs. Load

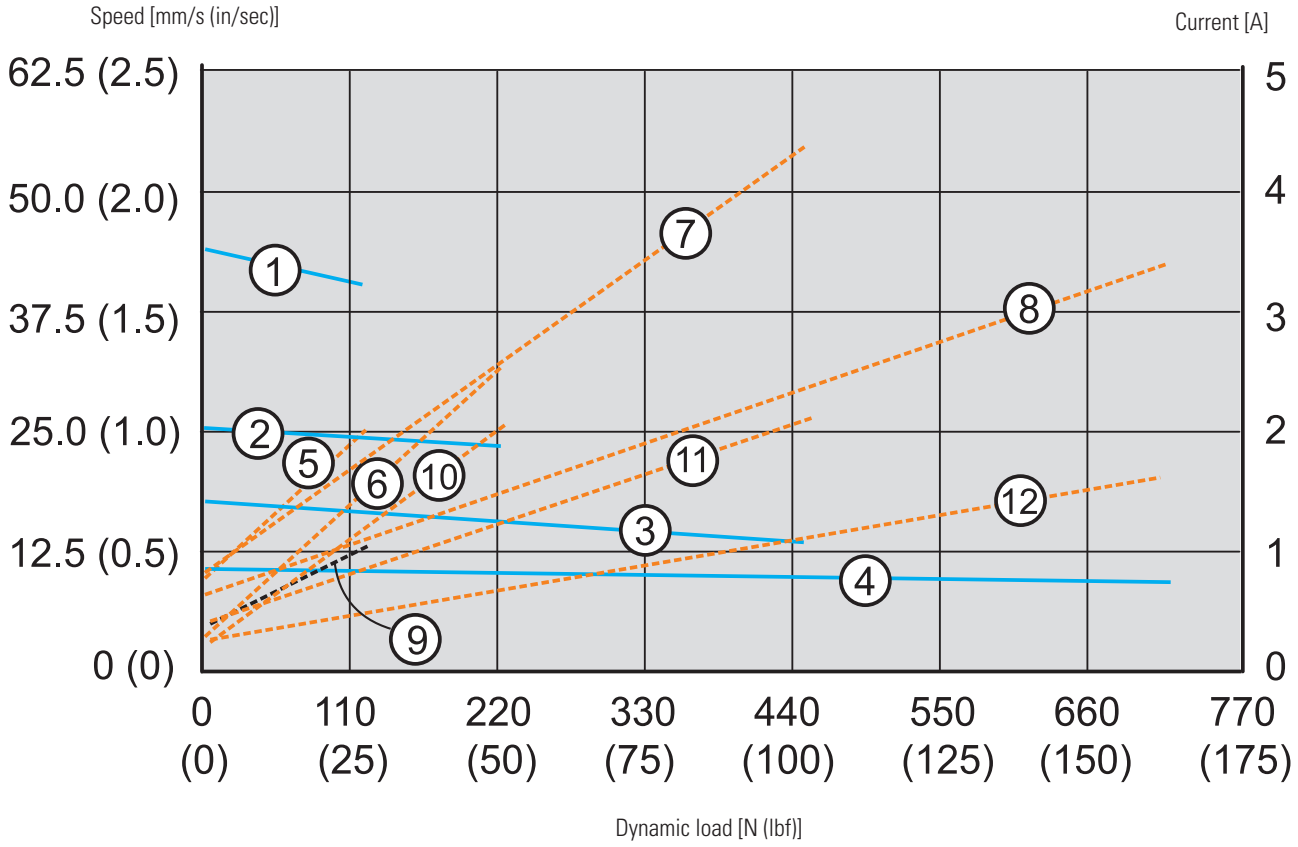

Speed

1: M1-D012(24)-0025 (111 N (25 lbf))
2: M1-D012(24)-0050 (222 N (50 lbf))
3: M1-D012(24)-0100 (445 N (100 lbf))
4: M1-D012(24)-0165 (734 N (165 lbf))

Current

5: M1-D012-0025 (111 N (25 lbf))
6: M1-D012-0050 (222 N (50 lbf))
7: M1-D012-0100 (445 N (100 lbf))
8: M1-D012-0165 (734 N (165 lbf))
9: M1-D024-0025 (111 N (25 lbf))
10: M1-D024-0050 (222 N (50 lbf))
11: M1-D024-0100 (445 N (100 lbf))
12: M1-D024-0165 (734 N (165 lbf))

Dynamic load [N (lbf)]

M-Track – Ordering Key

Ordering Key

1	2	3	4
M1-D012-	**0025-**	**01-**	**LN**

1. Model and input voltage
M1-D012- = M-Track, 12 Vdc
M1-D024- = M-Track, 24 Vdc

2. Dynamic load capacity and screw type
0025- = 111 N (25 lbf), acme
0050- = 222 N (50 lbf), acme
0100- = 445 N (100 lbf), acme
0165- = 734 N (165 lbf), acme

3. Ordering stroke length
01- = 1 inch (25.4 mm)
02- = 2 inch (50.8 mm)
03- = 3 inch (76. 2 mm)
04- = 4 inch (101.6 mm)
05- = 5 inch (127.0 mm)
06- = 6 inch (152.4 mm)
07- = 7 inch (177.8 mm)
08- = 8 inch (203.2 mm)
09- = 9 inch (228.6 mm)
10- = 10 inch (254.0 mm)
11- = 11 inch (279.4 mm)
12- = 12 inch (304,8 mm)

4. Control option
LN = End-of-stroke limit switches
LP = End-of-stroke limit switches and potentiometer feedback (1)

(1) Not possible with 1 inch stroke

M-Track – Electrical Connections

Standard

Actuator supply voltage	[Vdc]	
M1-D012		12
M1-D024		24

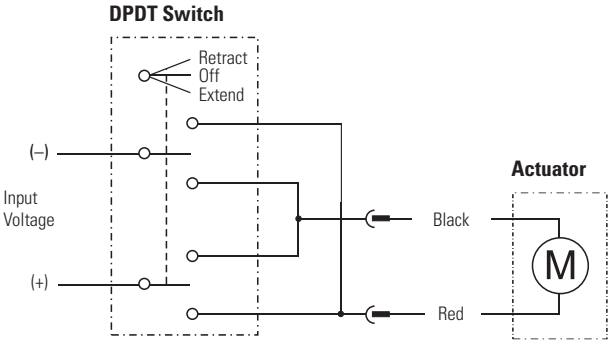

Connect the red lead to positive and black to negative to extend the actuator. Change polarity to retract the actuator.

With Potentiometer

Actuator supply voltage	[Vdc]	
M1-D012		12
M1-D024		24
Potentiometer type		linear membrane
Potentiometer resistance	[kohm]	12
Potentiometer max. input voltage	[Vdc]	27
Resistance tolerance	[%]	± 20
Potentiometer linearity	[%]	5
Potentiometer output resolution	[ohm/mm]	
M1-D0xx-xxxxA-01		not possible
M1-D0xx-xxxxA-02		472
M1-D0xx-xxxxA-04		236
M1-D0xx-xxxxA-06		118
M1-D0xx-xxxxA-08		79
M1-D0xx-xxxxA-10		47
M1-D0xx-xxxxA-12		39

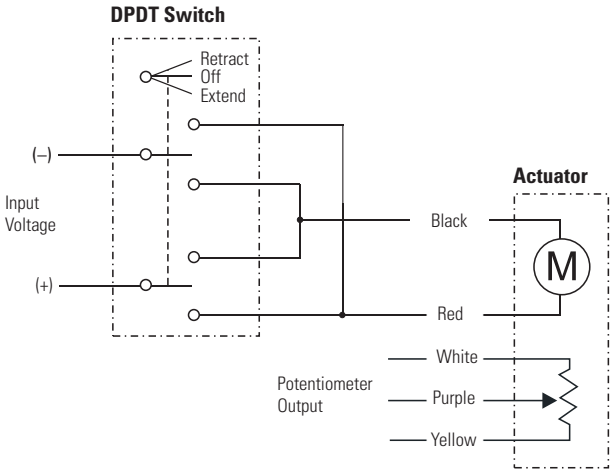

Connect the red lead to positive and black to negative to extend the actuator. Change polarity to retract the actuator. The potentiometer output has 0 ohm between white and purple leads when the actuator is fully retracted and 12 kohm when fully extended.

Electrak® 050 – Technical Features

Standard Features

- Designed for office or medical applications
- Small, quiet and lightweight
- Short retracted length
- Low cost
- Durable and corrosion free plastic housing
- Color molded into the plastic, no painting required
- Maintenance free
- Internally restrained extension tube
- Estimated life is minimum 40000 cycles

General Specifications

Screw type	worm
Nut type	lead
Manual override	no
Anti-rotation	yes
Static load holding brake	no (self-locking)
Safety features	internal limit switches overload clutch auto reset thermal switch
Electrical connections	cable with flying leads or connector
Compliances	CE, UKCA

Optional Mechanical Features

Cross hole orientation

Optional Electrical Features

End of stroke limit switches with dynamic braking
Potentiometer feedback

Electrak 050 – Technical Specifications

Mechanical Specifications

Max. static load [1] DExx17W41 DExx17W42 DExx17W44	[N (lbf)]	 1020 (224) 550 (120) 280 (60)
Max. dynamic load (Fx) DExx17W41 DExx17W42 DExx17W44	[N (lbf)]	 510 (112) 275 (60) 140 (30)
Speed @ no load/max. load	[mm/s (in/s)]	12/9 (0.5 /0.35) 24/18 (0.9/0.7) 48/37 (1.9/1.5)
Min. ordering stroke (S) length	[mm]	25
Max. ordering stroke (S) length	[mm]	200
Ordering stroke length increments	[in]	25
Operating temperature limits	[°C (F)]	-30 – 80 (-22 – 176)
Full load duty cycle @ 20 °C (70 °F)	[%]	25
End play, maximum	[mm (in)]	1.5 (0.06)
Restraining torque	[Nm (lbf-in)]	0
Protection class - static		IP56
Salt spray resistance	[h]	96

Electrical Specifications

Available input voltages	[Vdc]	12, 24, 36
Input voltage tolerance	[%]	± 10
Current draw @ no load/max. load [1] DE12-17W41 DE12-17W42 DE12-17W44 DE24-17W41 DE24-17W42 DE24-17W44	[A]	 1.4/3.8 0.7/1.9 1.2/3.8 0.6/1.8 1.4/3.8 0.7/1.9
Cable lengths, standard [2]	[mm (in)]	150 (6.0)
Cable diameter	[mm (in)]	13 (0.5)
Cable leads cross section	[mm^2 (AWG)]	1 (18)

(1) For current draw for 36 Vdc input voltage models - contact customer support.
(2) The same cable is used both for the input voltage and the feedback signals.

Electrak® 050 – Dimensions

Dimensions	Projection
mm [inch]	

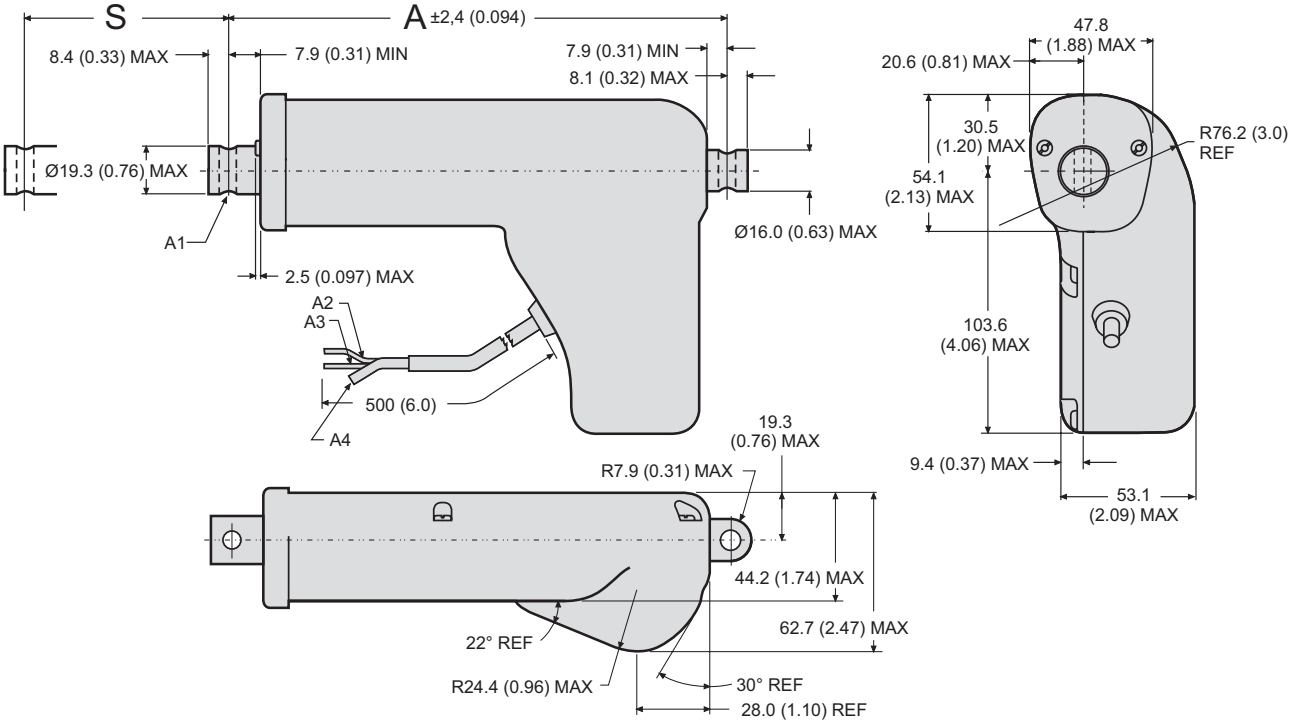

Note: see 3D models for all available adapter options

S: stroke (tolerances: 17W41 = ± 3.23 mm (0.127 in) , 17W42 = ± 4.25 mm (0.167 in) , 17W44 = ± 5.26 mm (0.207 in))
A: retracted length
A1: Shown are Ø 6 mm +0.15/ -0 (0.236 in +0.006/ -0) mounting cross holes (2 ×) in standard position.

A2: red lead
A3: yellow lead
A4: vent tube Ø 3 mm (0.188 in)

Stroke, Retracted Length and Weight Relationships

Ordering stroke (S)	[in]	1	2	3	4	5	6	7	8
Retracted length (A)	[mm]	114.2	139.2	164.2	189.2	214.2	239.2	264.2	289.2
	[in]	4.496	5.480	6.465	7.449	8.433	9.417	10.402	11.386
Add on length for option 0.25 inch fork front adapter	[mm]	16.3							
	[in]	0.64							
Add on length for option potentiometer	[mm]	31.5							*
	[in]	1.24							*
Weight	[kg]	0.59	0.64	0.69	0.73	0.78	0.82	0.87	0.91
	[lbs]	1.30	1.41	1.52	1.61	1.72	1.81	1.92	2.01
Add on weight for option potentiometer	[kg]	0.10							*
	[lbs]	0.22							*

* 8 inch stroke not possible with potentiometer (PO, MP, PF options)

Electrak 050 – Performance Diagrams

Speed and Current vs. Load

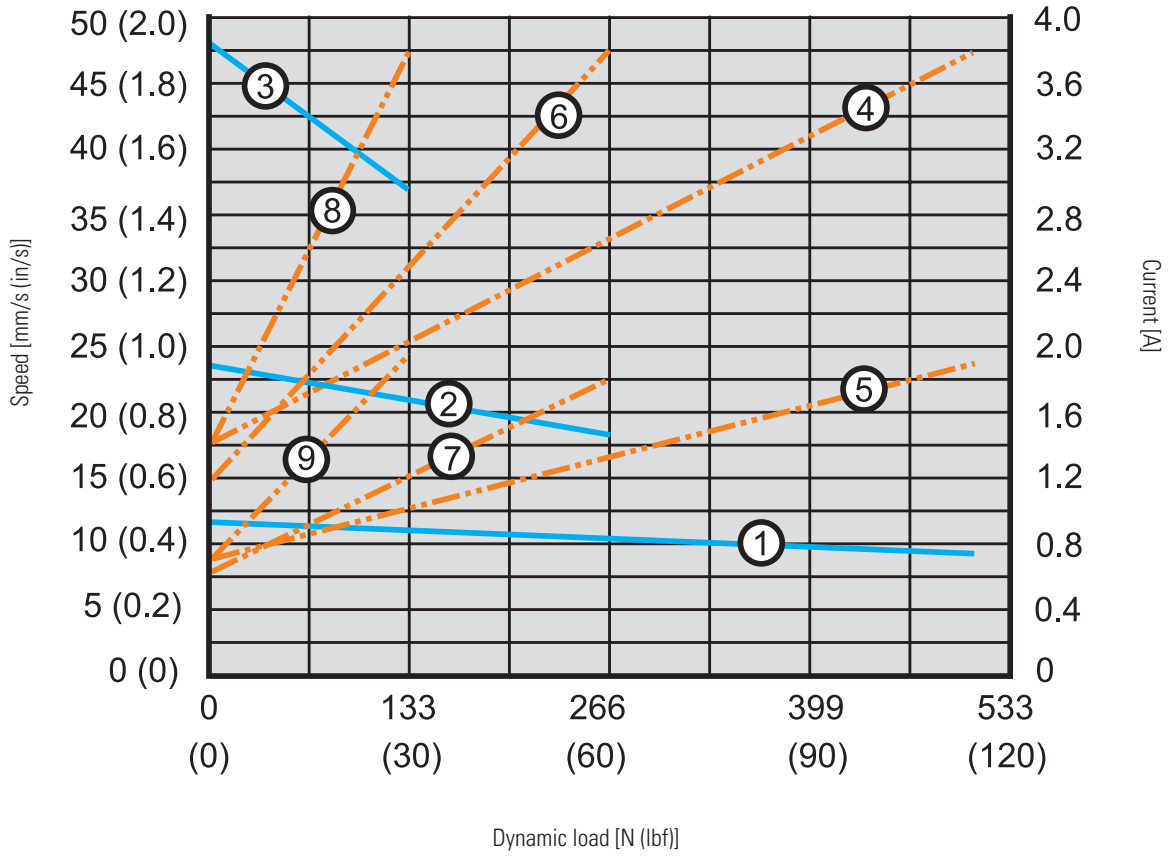

Speed

1: DExx-17W41 (510 N (112 lbf))
2: DExx-17W42 (275 N (60 lbf))
3: DExx-17W44 (140 N (30 lbf))

Current

4: DE12-17W41 (12 Vdc, 510 N (112 lbf))
5: DE24-17W41 (24 Vdc, 510 N (112 lbf))
6: DE12-17W42 (12 Vdc, 275 N (60 lbf))
7: DE24-17W42 (24 Vdc, 275 N (60 lbf))
8: DE12-17W44 (12 Vdc, 140 N (30 lbf))
9: DE24-17W44 (24 Vdc, 140 N (30 lbf))

Electrak® 050 – Ordering Key

Ordering Key

1	2	3	4	5	6	7	8	9
DE12	**-**	**17W41-**	**02**	**NN**	**HH**	**N-**	**C**	**A**

1. Model and input voltage
DE12 = Electrak 050, 12 Vdc
DE24 = Electrak 050, 24 Vdc
DE36 = Electrak 050, 36 Vdc

2. CE compliance
- = no
C = yes

3. Dynamic load capacity
17W41 - = 510 N (112 lbf)
17W42 - = 275 N (60 lbf)
17W44 - = 140 N (30 lbf)

4. Ordering stroke length
01 = 1 inch (25.4 mm)
02 = 2 inch (50.8 mm)
03 = 3 inch (76.2 mm)
04 = 4 inch (101.6 mm)
05 = 5 inch (127.0 mm)
06 = 6 inch (152.4 mm)
07 = 7 inch (177.8 mm)
08 = 8 inch (203.2 mm)

5. Options
NN = no option
FN = end-off-stroke limits switches
NP = potentiometer
FP = end-off-stroke limits switches + potentiometer

6. Cross-hole orientatio
HH = standard cross-hole orientation in both ends
MH = cross-hole rotated 90° in both ends

7. Color of housing
N- = black

8. Type of connector
C = Packard Electric Pack-Con
D = no connector (flying leads)

9. Front adapter
A = cross-hole 0.25 inch
B = fork 0.25 inch

Electrak 050 – Electrical Connections

Without Option

Actuator supply voltage DE12 DE24 DE36	[Vdc]	 12 24 36

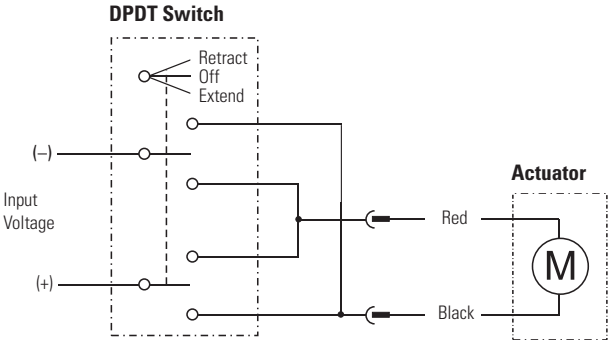

Connect the black lead to positive and red to negative to extend the actuator. Change polarity to retract the actuator.

Option Potentiometer

Actuator supply voltage DE12 DE24 DE36	[Vdc]	 12 24 36
Potentiometer type		wire-wound
Potentiometer max. input voltage	[Vdc]	32
Potentiometer max. power	[W]	2
Potentiometer linearity	[%]	± 0.25
Potentiometer output resolution DExx-17W41 DExx-17W42 DExx-17W44	[ohm/mm]	 22.0 21.9 21.2

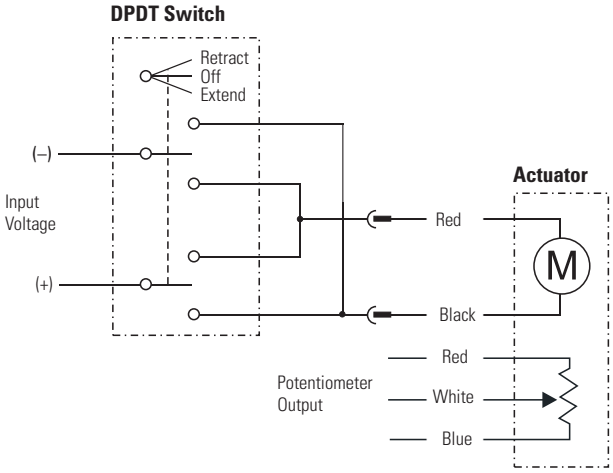

Connect the black lead to positive and red to negative to extend the actuator. Change polarity to retract the actuator. The potentiometer output has 0 ohm between white and blue when the actuator is fully retracted.

Max Jac® – Technical Features

SMART

Standard Features

- Designed for industrial applications
- Rugged aluminium housing with IP69K
- High efficiency
- Long life
- Hard coat anodizing for high corrosion resistance
- Virtually maintenance free
- Worm or ball screw models
- Non-contact analog position feedback signal

General Specifications

Screw type	worm or ball
Nut type	lead or ball
Manual override	no
Anti-rotation	no
Static load holding brake worm screw models ball screw models	 no (self-locking) no
Safety features	none
Electrical connections	flying leads or cable with AMP Superseal connector
Compliances	CE, UKCA, RoHS, REACH

Optional Electrical Features

Digital feedback

Compatible Controls

Contact customer support at www.thomsonlinear.com/cs

Max Jac – Technical Specifications

Mechanical Specifications

Max. static load [1] MXxxW (worm screw) MXxxB (ball screw) [2]	[N (lbf)]	 2000 (450) 100 - 350 (22 - 79)
Max. dynamic load (Fx) MXxxW (worm screw) MXxxB (ball screw)	[N (lbf)]	 500 (112) 800 (180)
Speed @ no load/max. load MXxxW (worm screw) MXxxB (ball screw)	[mm/s (in/s)]	 33 / 19 (1.3 / 0.75) 60 / 30 (2.4 / 1.2)
Min. ordering stroke (S) length	[mm]	50
Max. ordering stroke (S) length MXxxW (worm screw) MXxxB (ball screw)	[mm]	 200 300
Ordering stroke length increments	[mm]	50
Operating temperature limits	[°C (F)]	- 40 – 85 (- 40 – 185)
Duty cycle, maximum [3] MXxxW (worm screw) MXxxB (ball screw)	[%]	 load dependent load dependent
End play, maximum	[mm (in)]	0.3 (0.012)
Restraining torque	[Nm (lbf-in)]	2 (1.48)
Protection class - static		IP66/IP69K
Salt spray resistance	[h]	500

(1) Max. static load at fully retracted stroke
(2) The static force (i.e. the back-driving force) for a ball screw unit varies and is dependent on the number of cycles it has been running and at which loads.
(3) See "Duty cycle vs. load" chart in the Glossary section starting on page 240.

Electrical Specifications

Available input voltages	[Vdc]	12, 24
Input voltage tolerance	[%]	+15 / -10
Current draw @ no load/max. load MX12W (12 Vdc input, worm screw) MX24W (24 Vdc input, worm screw) MX12B (12 Vdc input, ball screw) MX24B (24 Vdc input, ball screw)	[A]	 1.2/8.0 0.8/3.8 1.1/7.4 0.7/3.5
Inrush/stall current @ max. load MX12W (12 Vdc input, worm screw) MX24W (24 Vdc input, worm screw) MX12B (12 Vdc input, ball screw) MX24B (24 Vdc input, ball screw)	[A]	 18.0 9.0 18.0 9.0
Cable lengths, standard [1]	[mm (in)]	300 (12), 1600 (63)
Cable diameter [1]	[mm (in)]	6.2 (0.244)
Cable leads cross section [1]	[mm^2 (AWG)]	1 (18)

(1) The same cable is used both for the input voltage and the feedback signals.

Max Jac® – Dimensions

Dimensions	Projection
mm [inch]	

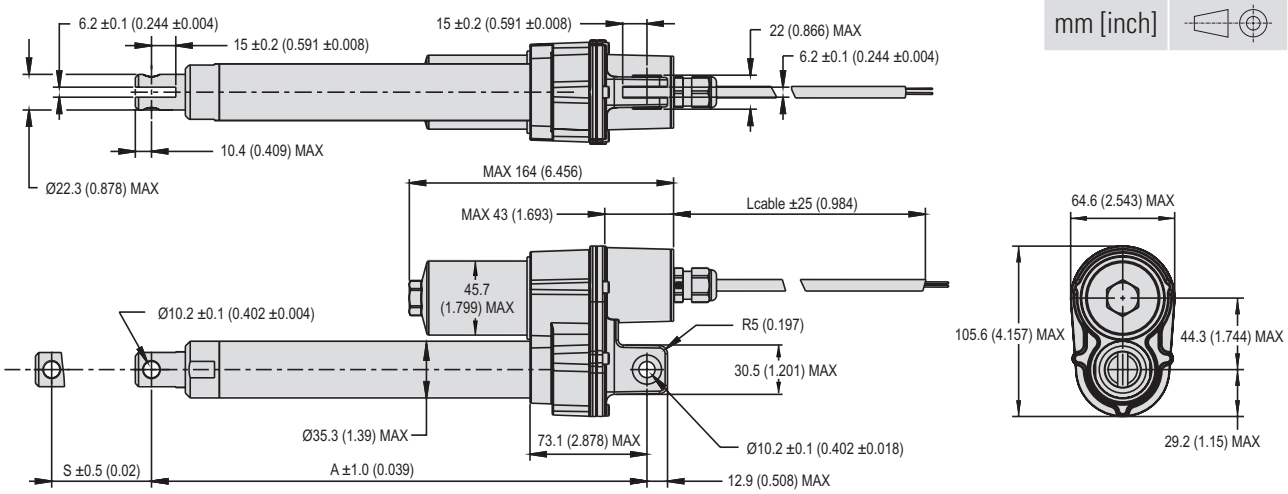

Stroke, Retracted Length and Weight Relationships

Ordering stroke (S)	[mm]	50	100	150	200	250*	300*
Retracted length (A)	[mm]	206	256	306	356	406	456
	[in]	8.11	10.08	12.05	14.02	15.98	17.95
Weight	[kg]	1.5	1.7	1.9	2.1	2.2	2.4
	[lbs]	3.3	3.8	4.2	4.6	4.8	5.3

* Stroke not possible for MSxxW1 (worm screw) models.

Max Jac – Performance Diagrams

Speed and Current vs. Load

Worm Screw Models (MXxxW)

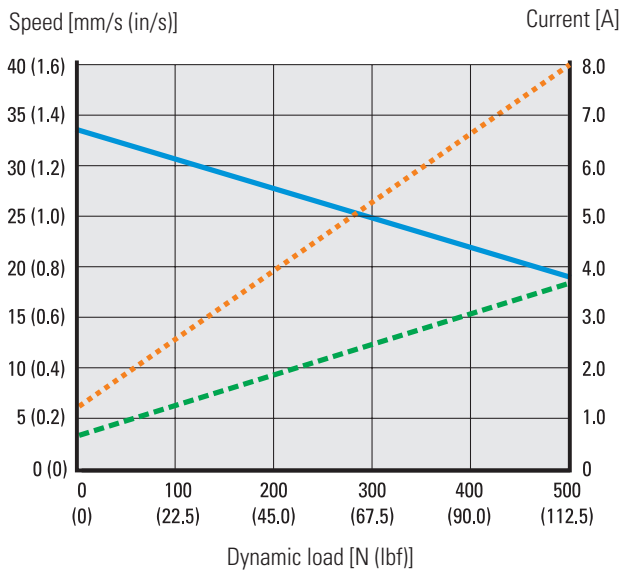

Ball Screw Models (MXxxB)

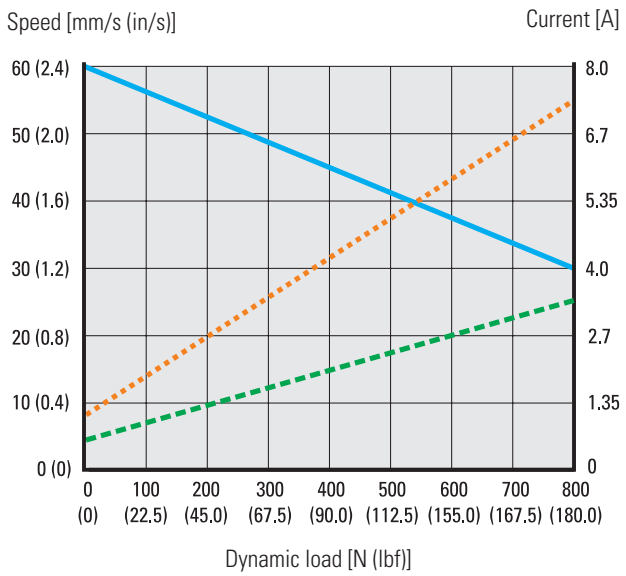

Speed — Current @ 12 Vdc — Current @ 24 Vdc

Duty Cycle vs. Load

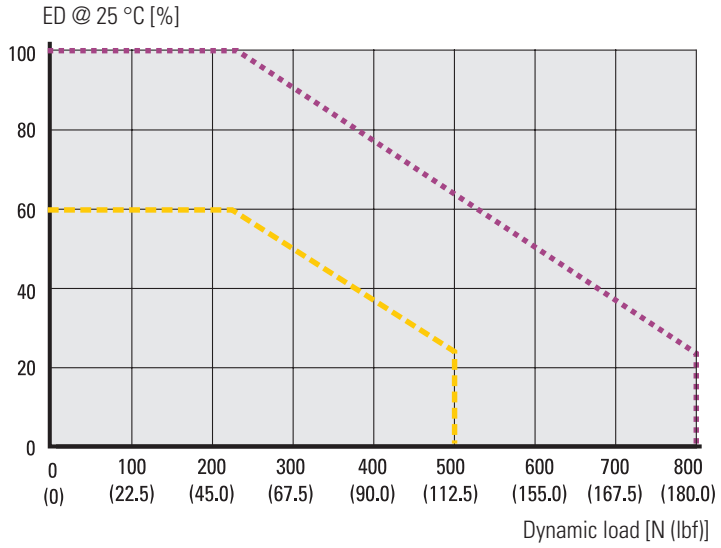

Worm Screw Models (MXxxW) — Ball Screw Models (MXxxB)

Max Jac® – Ordering Key

Ordering Key

1	2	3	4	5
MX12-	**W1**	**M05**	**P**	**0**

1. Model and input voltage
MX12- = Max Jac, 12 Vdc
MX24- = Max Jac, 24 Vdc

2. Dynamic load capacity, screw type and maximum speed
W1 = 500 N (112 lbf), worm screw, 35 mm/s (1.38 in/s)
B8 = 800 N (180 lbf, ball screw, 55 mm/s (2.17 in/s)

3. Ordering stroke length
M05 = 50 mm (1.969 in)
M10 = 100 mm (3.937 in)
M15 = 150 mm (5.906 in)
M20 = 200 mm (7.874 in)
M25 = 250 mm (9.843 in) (1)
M30 = 300 mm (11.811 in) (1)

4. Options
P = analog feedback (standard)
E = digital encoder feedback

5. Connector option
0 = 300 mm (12 in) long flying leads
1 = 300 mm (12 in) long cable and AMP Superseal connector
2 = 1600 mm (63 in) long cable and AMP Superseal connector

(1) Stroke not possible for MSxxW1 (worm screw) models.

Max Jac – Electrical Connections

Option Analog Feedback

Actuator supply voltage MX12 MX24	[Vdc]	 12 24
Analog feedback type		non-contact
Analog feedback input voltage	[Vdc]	5
Analog feedback output voltage	[Vdc]	0.5 - 4.5
Analog feedback output linearity	[%]	± 1

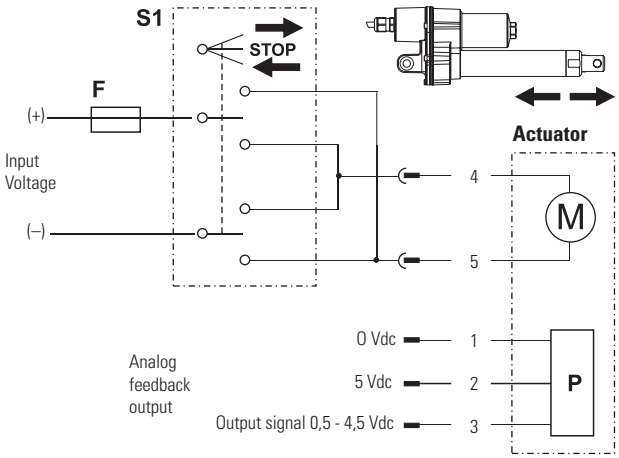

M Actuator motor
S1 Double pole double throw (DPDT) switch
F Fuse
P Analog feedback device

Connect lead 5 to positive and 4 to negative to extend the actuator. Change polarity to retract the actuator. The analog feedback device is supplied between leads 1 and 2, and the output signal is generated on lead 3.

Keep in mind that the actuator voltage must be switched off when reaching the ends of stroke or due to a mid-stroke overload to avoid causing damage to the actuator.

Option Encoder Feedback

Actuator supply voltage MX12 MX24	[Vdc]	 12 24
Encoder type		incremental
Number of encoder channels		2
Encoder input voltage	[Vdc]	5
Encoder output resolution MX12W MX12B	[pulse/mm]	 9.86 5.84

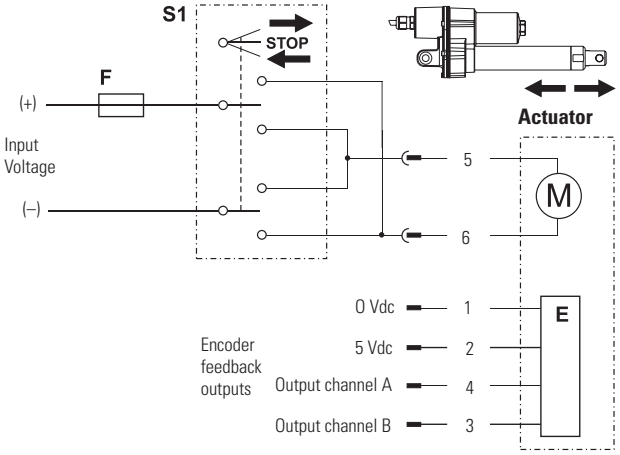

M Actuator motor
S1 Double pole double throw (DPDT) switch
F Fuse
E Encoder feedback device

Connect lead 6 to positive and 5 to negative to extend the actuator. Change polarity to retract the actuator. The encoder feedback device is supplied between leads 1 and 2, and the output signal train from channel A is generated on lead 4 and channel B on lead 3.

Keep in mind that the actuator voltage must be switched off when reaching the ends of stroke or due to a mid-stroke overload to avoid causing damage to the actuator.

Electrak® Throttle – Technical Features

SMART

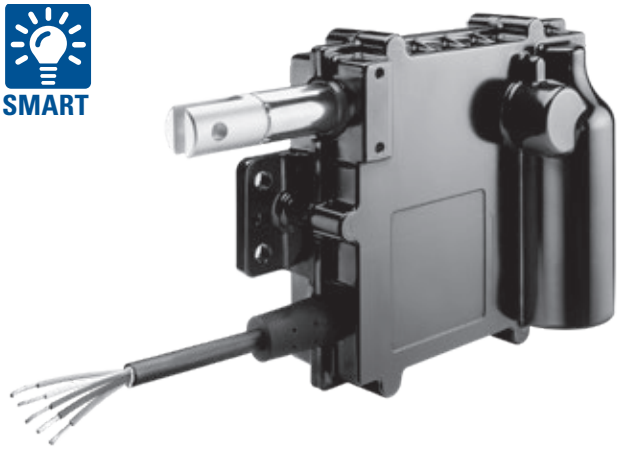

Standard Features

- Designed for industrial applications
- Rugged aluminium housing with IP69K/IP67 ingress protection
- E-coated housing for corrosion resistance
- Minimal maintenance
- Integrated electronic options
- High end features at a low cost
- Integrated mounting holes

General Specifications

Screw type	worm
Nut type	worm
Manual override	no
Anti-rotation	yes
Static load holding brake	no (self-locking)
Safety features	end-of-stroke overload protection mid stroke overload protection motor auto reset thermal switch (1)
Electrical connections	cable with flying leads or Deutsch connector
Compliances	CE, UKCA

(1) no thermal switch on units with temperature rating E.

Optional Mechanical Features

Adapter orientation
Right angle cable exit
Extended operating temperature range

Optional Electrical Features

Analog position feedback
Internal end-of-stroke limit switches
SAE J1939 CAN bus

Compatible Controls

Contact customer support at www.thomsonlinear.com/cs

Electrak Throttle – Technical Specifications

Mechanical Specifications

Max. static load [1] ETxx-084 [2] ETxx-174	[N (lbf)]	 90 (20) 260 (60)
Max. dynamic load (Fx) ETxx-084 [2] ETxx-174	[N (lbf)]	 45 (10) 130 (30)
Speed @ no load/max. load ETxx-084 [2] ETxx-174	[mm/s (in/s)]	 96/83 (3.7/3.3) 48/37(1.9/1.45)
Ordering stroke (S) length	[mm(in)]	50.8 (2)
Retracted length	[mm(in)]	184.7 (7.27)
Operational life	[cycles]	500 0 00
Operating temperature limits ETxx-xxx-xS ETxx-xxx-xE	[°C (F)]	 - 40 – 85 (- 40 – 185) - 40 – 125 (- 40 – 257)
Full load duty cycle @ 25 °C (77 °F)	[%]	50
End play, maximum	[mm (in)]	1.5 (0.06)
Restraining torque	[Nm (lbf-in)]	0
Protection class - static		IP69K, IP65
Weight	[kg (lbf)]	1.11 (2.5)
Salt spray resistance	[h]	500

(1) Max. static load at fully retracted stroke.
(2) The ETxx-084 (high speed version) can only be ordered in combination with operating temperature rating E.

Electrical Specifications

Available input voltages	[Vdc]	12, 24
Input voltage tolerance	[%]	± 10
Current draw @ no load/max. load [1] ET12 (12 Vdc input voltage) ET24 (24 Vdc input voltage)	[A]	 1.5/4 0.75/2
Motor cable length	[m (in)]	165 (6.5)
Motor cable diameter	[mm (in)]	11.5 (0.45)
Motor cable leads cross section	[mm^2 (AWG)]	1 (18)

(1) Max. current draw ratings do not include motor inrush current. Typical inrush current values are 12 A at 12 VDC and 6 A at 24 VDC.

Electrak® Throttle – Dimensions

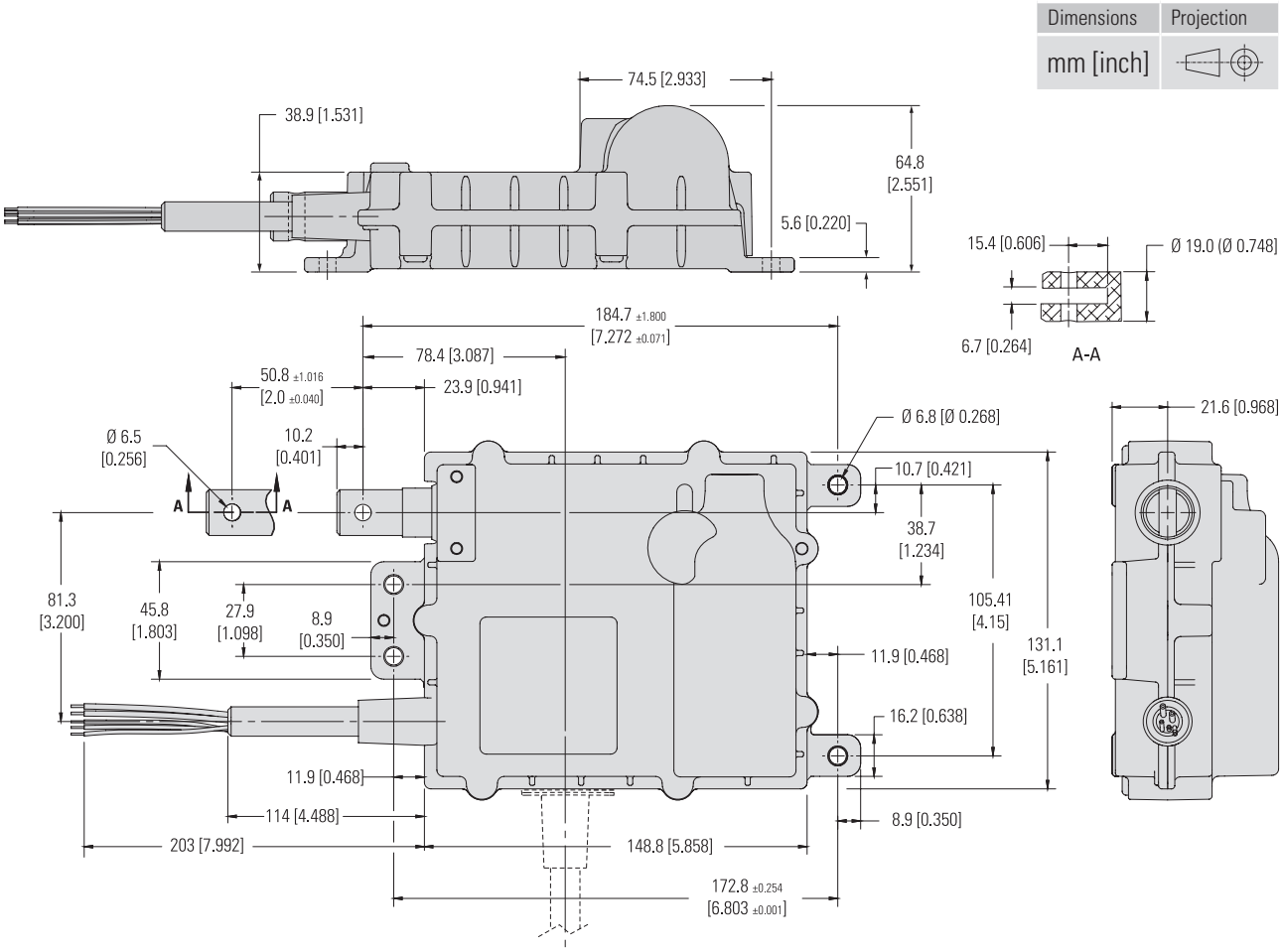

Electrak Throttle – Performance Diagrams

Speed and Current vs. Load

ETxx-084 (45 N (10 lbf), high speed)

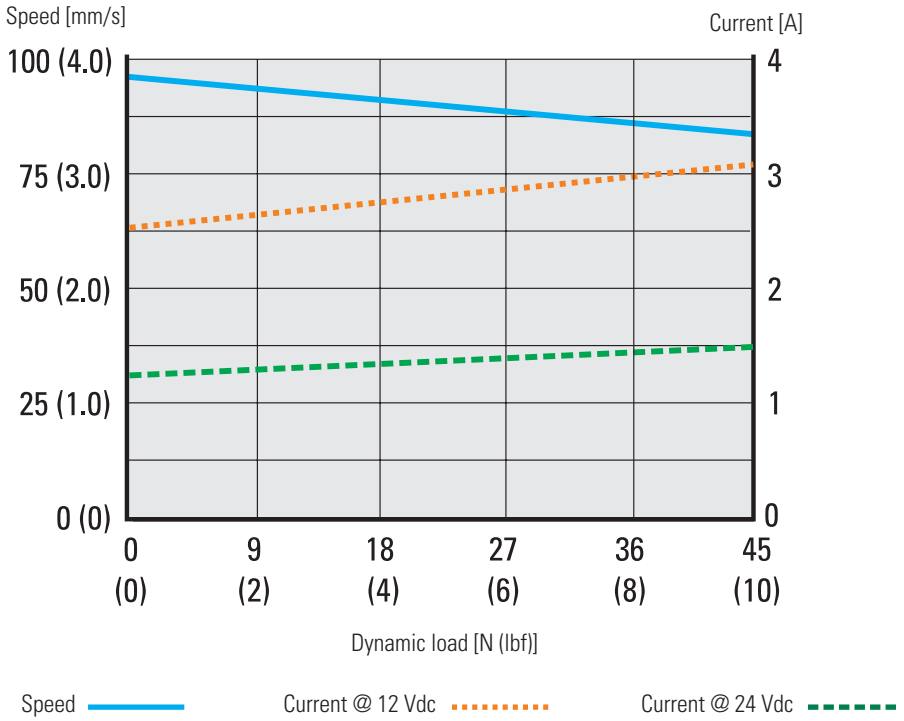

ETxx-174 (130 N (30 lbf), standard speed)

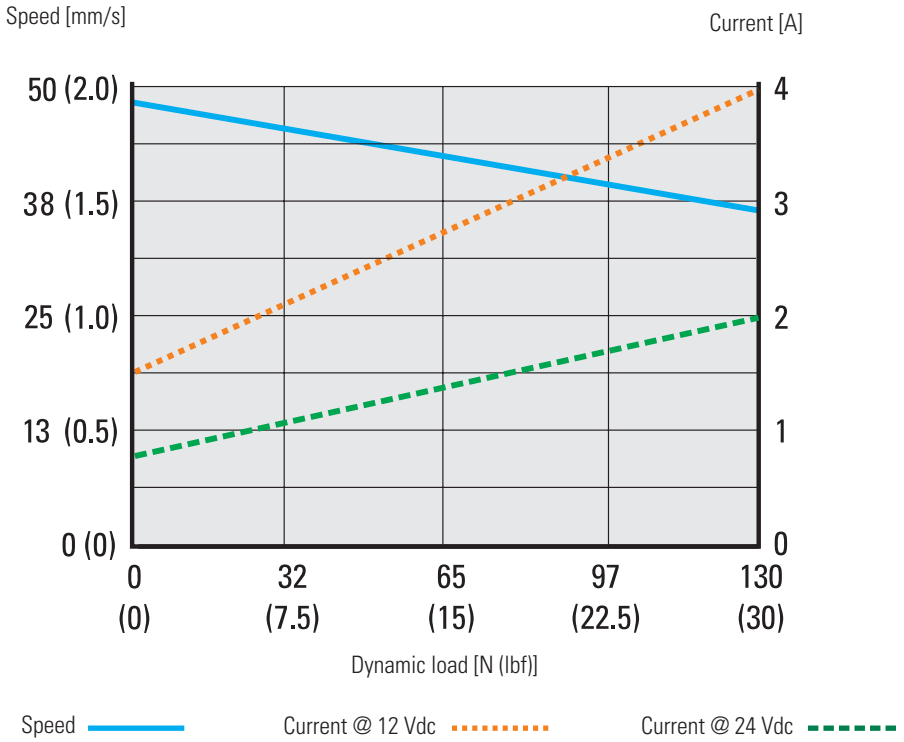

Electrak® Throttle – Ordering Key

Ordering Key

1	2	3	4	5	6	7
ET12-	**174-**	**S**	**S**	**NP**	**1**	**S**

1. Model and input voltage
ET12 - = Electrak® Throttle, 12 Vdc
ET24 - = Electrak® Throttle, 24 Vdc

2. Max. dynamic load and speed version
084 - = 45 N (10 lbf), high speed [1]
174 - = 130 N (30 lbf), standard speed

3. Harness orientation
S = parallel to adapter
R = rotated 90° in housing

S

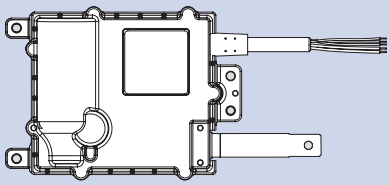

R

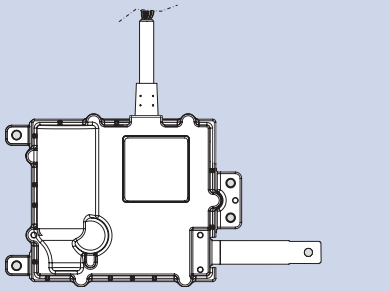

(1) Can only be ordered with high temperature rating (code E in position 4). Note that there is no thermal switch to protect the motor on the high temperature rated models.

4. Temperature rating
S = standard: -40 (-40) to +85 (+185) °C (F)
E = high temperature: -40 (-40) to +125 (+257) °C (F)

5. Control option
NP = analog position feedback sensor
FN = end-of-stroke limit switches
FP = analog position feedback and end-of-stroke limit switches
CN = SAE J1939 CAN bus

6. Connector option
1 = flying leads
2 = Deutsch DTM04-6P connector

7. Adapter option
S = standard adapter orientation
M = adapter rotated 90°

S

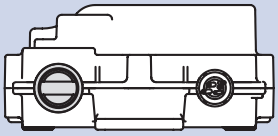

M

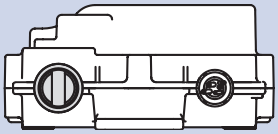

Electrak Throttle – Electrical Connections

Option End-of-Stroke Limit Switches

Actuator supply voltage [Vdc]	
ET12	12
ET24	24

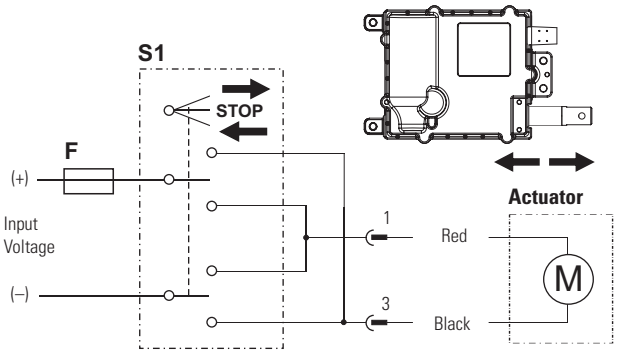

M Actuator motor
S1 Double pole double throw (DPDT) switch
F Fuse

Connect black lead (connector pin 3) to positive and red lead (pin 1) to negative to extend the actuator. Change polarity to retract the actuator. When reaching the ends of stroke, the internal limit switches automatically will stop motion. A clutch is included as a safety feature to stop the motion in case of mid stroke overload.

Option Analog Feedback

Actuator supply voltage [Vdc]	
ET12	12
ET24	24
Analog feedback type	non-contact
Analog feedback input voltage, max. [Vdc in]	32
Analog feedback output voltage [Vdc out]	
fully retracted	< 5 % of VDC in
fully extended	> 75 % of VDC in
Analog feedback output current, max. [mA]	1
Analog feedback output linearity [%]	± 1

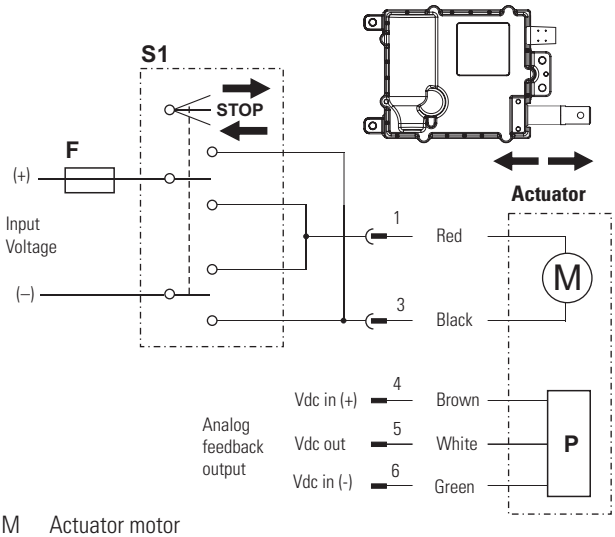

M Actuator motor
S1 Double pole double throw (DPDT) switch
F Fuse
P Analog feedback device

Connect black lead (connector pin 3) to positive and red lead (pin 1) to negative to extend the actuator. Change polarity to retract the actuator. If the actuator should reach the mechanical end of stroke, the built in clutch will stop the motion. The clutch, however, is a safety feature and should not be used as end of stroke control during normal operation.

The analog feedback device is supplied between brown lead (connector pin 4) and green lead (pin 6), while the output signal is on white lead (pin 5).

Electrak® Throttle – Electrical Connections

Option Analog Feedback + End-of-Stroke Limit Switches

Actuator supply voltage [Vdc] ET12 ET24	 9 - 16 18 - 32
Analog feedback type	non contact
Analog feedback input voltage, max. [Vdc in]	32
Analog feedback output voltage [Vdc out] fully retracted fully extended	 < 5 % of VDC in > 75 % of VDC in
Analog feedback output current, max. [mA]	1
Analog feedback output linearity [%]	± 1

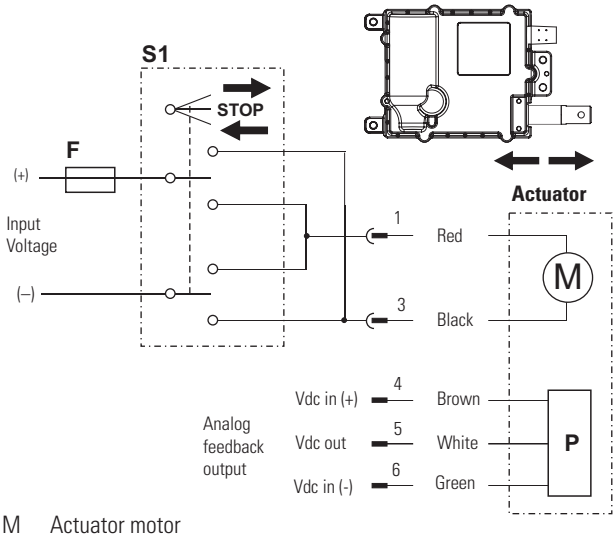

M Actuator motor
S1 Double pole double throw (DPDT) switch
F Fuse
P Analog feedback device

Connect black lead (connector pin 3) to positive and red lead (pin 1) to negative to extend the actuator. Change polarity to retract the actuator. When reaching the ends of stroke, the internal limit switches automatically will stop motion. A clutch is included as a safety feature to stop the motion in case of mid stroke overload.

The analog feedback device is supplied between brown lead (connector pin 4) and green lead (pin 6), while the output signal is on white lead (pin 5).

Option SAE J1939 CAN bus

Actuator supply voltage [Vdc] ET12 ET24	 12 24
CAN bus signal information	see user manual

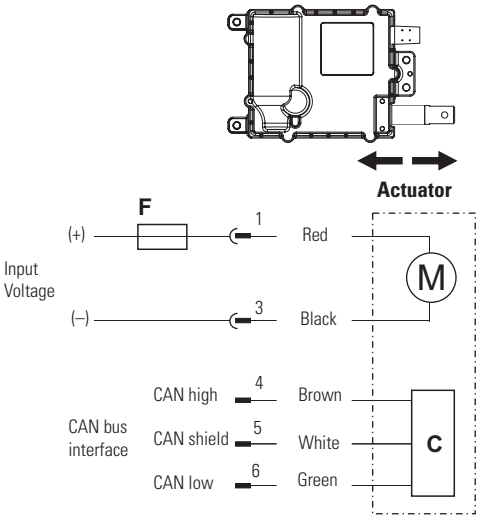

M Actuator motor
S1 Double pole double throw (DPDT) switch
F Fuse
C CAN bus device

Connect red lead to (connector pin 1) to positive and black (pin 3) to negative to power up the actuator. A clutch is included as a safety feature to stop the motion in case of mechanical overload.

The actuator is controlled via the CAN bus interface on brown lead (connector pin 4), white lead (pin 5) and green lead (pin 6).

Notes

Electrak® PPA – Technical Features

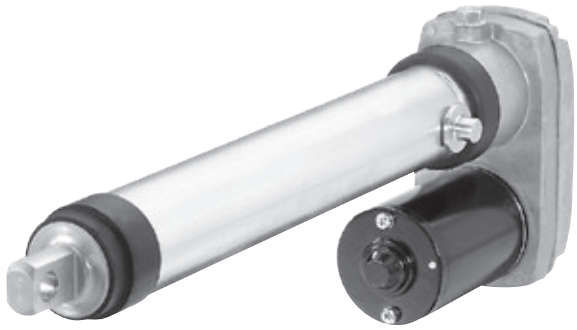

Standard Features

- Strong and versatile heavy-duty actuator
- High duty cycle
- 12, 24, 36 or 90 Vdc as standard input voltages
- Highly efficient ball screw drive system
- Static load up to 13350 N (3000 lbf)
- Dynamic load up to 6670 N (1500 lbf)
- Stroke up to 36 inches
- Overload clutch for mid and end of stroke protection
- Motor with thermal switch
- Maintenance free

General Specifications

Screw type	ball
Nut type	ball nut
Manual override	no
Anti-rotation	no
Static load holding brake	yes
Safety features	overload clutch motor auto reset thermal switch
Electrical connections	flying leads
Compliances standard optional	 – CE (1, 2)

(1) Actuators used in the EU must be in compliance with CE
(2) 90 Vdc model not CE compliant

Optional Mechanical Features

Protective bellows

Optional Electrical Features

Potentiometer feedback

Encoder feedback

End of stroke limit switches

Accessories

Rear clevis mounting kit

Tube mounting kits

Compatible Controls

Contact customer support at www.thomsonlinear.com/cs

Electrak PPA – Technical Specifications

Mechanical Specifications

Max. static load [1]	[N (lbf)]	13350 (3000)
Max. dynamic load (Fx) PPAxx-18B65 PPAxx-58B65	[N (lbf)]	 3330 (750) 6670 (1500)
Speed @ no load/max. load PPAxx-18B65 PPAxx-58B65	[mm/s (in/s)]	 32/28 (1.26/1.10) 12/9 (0.49/0.37)
Min. ordering stroke (S) length	[in]	4
Max. ordering stroke (S) length [2]	[in]	36
Standard stroke lengths	[in]	4, 8, 12, 18, 24, 36
Operating temperature limits	[°C (F)]	- 25 – 65 (- 15 – 150)
Full load duty cycle @ 25 °C (77 °F)	[%]	30
End play, maximum	[mm (in)]	1.0 (0.04)
Restraining torque PPAxx-18B65 PPAxx-58B65	[Nm (lbf-in)]	 11 (100) 22 (200)
Protection class - static		IP54

(1) Max. static load at fully retracted stroke

Electrical Specifications

Available input voltages [1]	[Vdc]	12, 24, 36, 90
Input voltage tolerance	[%]	± 10
Current draw @ no load/max. load [2] PPA12-18B65 PPA12-58B65 PPA24-18B65 PPA24-58B65 PPA36-18B65 PPA36-58B65	[A]	 7.5/22.0 7.5/13.5 3.0/12.0 3.0/12.0 4.5/8.0 3.0/6.0
Motor leads length	[mm (in)]	420 (16.5)
Motor leads cross section	[mm^2 (AWG)]	2 (14)
Connection of electrical options [3]		terminals

(1) For other input voltages - contact customer support
(2) For current draw for 90 Vdc input voltage models - contact customer support
(3) Potentiometer or end of stroke limit switches

Electrak® PPA – Dimensions

Dimensions	Projection
mm [inch]	

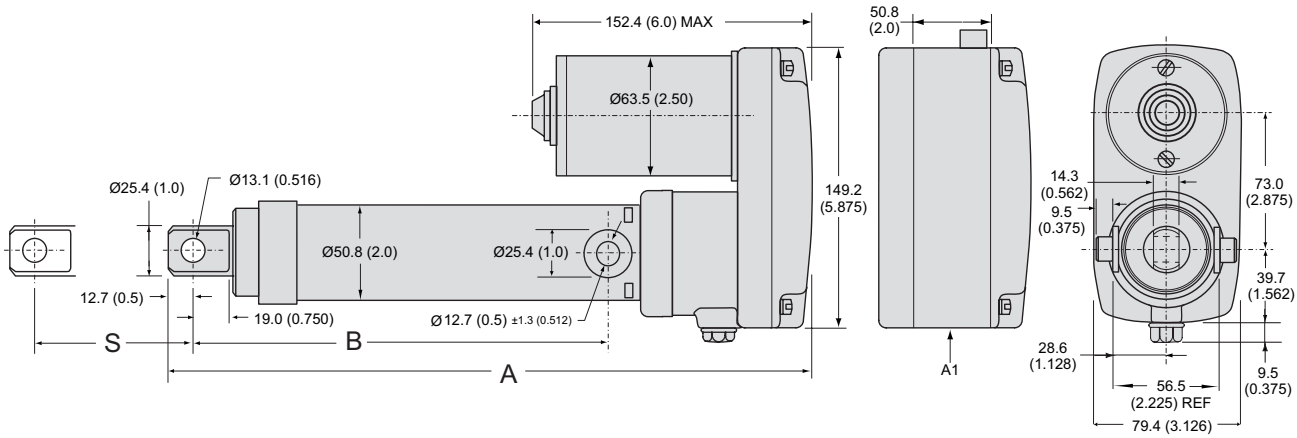

S: stroke
A: retracted length

B: retracted length to trunnions
A1: housing dimensions for limit switch, encoder or potentiometer options

Stroke, Retracted Length and Weight Relationships

Ordering stroke (S)	[in (mm)]	4 (101.5)	8 (203.2)	12 (304.8)	18 (457.2)	24 (609.6)	36 (914.4)
Retracted length without option (A)	[mm]	348.0	449.6	551.2	754.4	906.8	1211.6
	[in]	13.7	17.7	21.7	29.7	35.7	47.7
Retracted length with potentiometer, encoder or limit switch option (A)	[mm]	398.8	500.4	602.0	805.2	957.6	1262.4
	[in]	15.7	19.7	23.7	31.7	37.7	49.7
Retracted length to trunnions (B)	[mm]	223.5	352.1	426.7	629.9	782.3	1087.1
	[in]	8.8	12.8	16.8	24.8	30.8	42.8
Weight	[kg]	4.5	5.3	6.0	7.2	8.4	10.8
	[lbs]	10.0	11.6	13.3	15.9	18.5	23.8
Add on weight for potentiometer, encoder or limit switch options	[kg]	0.5					
	[lbs]	1.1					

Electrak PPA – Performance Diagrams

Speed and Current vs. Load

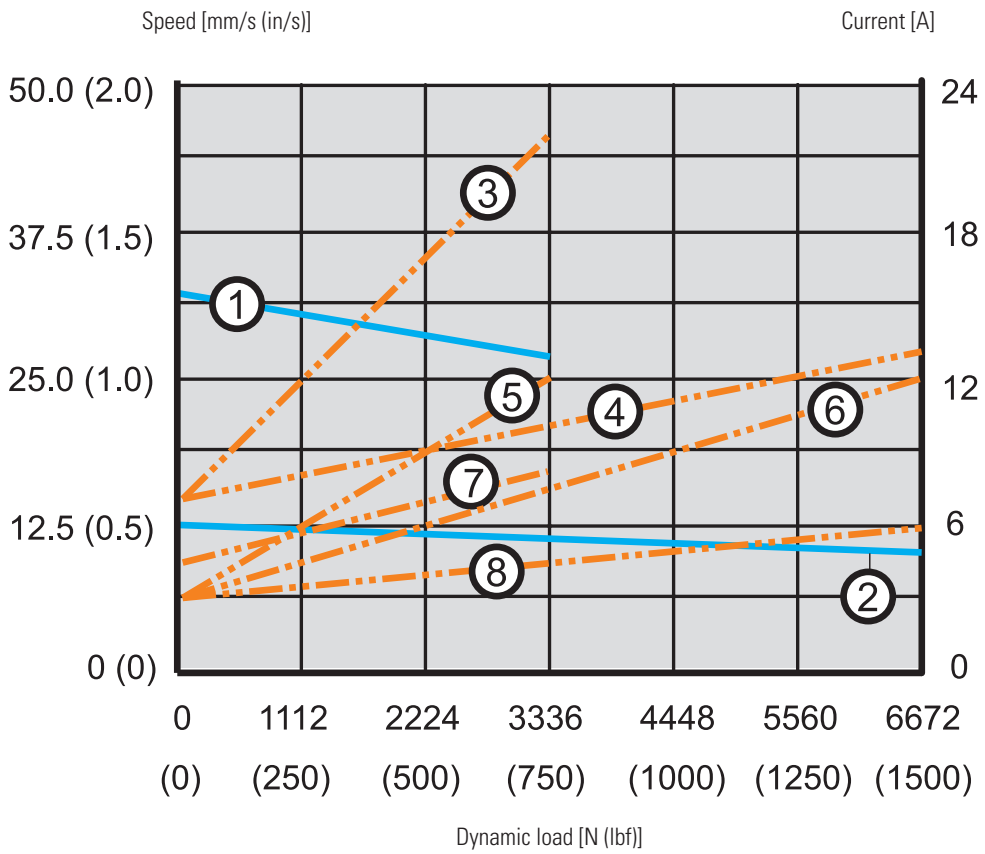

Speed
1: PPAxx-18B65 (3330 N (750 lbf))
2: PPAxx-58B65 (6670 N (1500 lbf))

Current
3: PPA12-18B65 (12 Vdc, 3330 N (750 lbf))
4: PPA12-58B65 (12 Vdc, 6670 N (1500 lbf))
5: PPA24-18B65 (24 Vdc, 3330 N (750 lbf))
6: PPA24-58B65 (24 Vdc, 6670 N (1500 lbf))
7: PPA36-18B65 (36 Vdc, 3330 N (750 lbf))
8: PPA36-58B65 (36 Vdc, 6670 N (1500 lbf))

Electrak® PPA – Ordering Key

Ordering Key

1	2	3	4	5	6
PPA12-	**58B65-**	**08**	**N**	**LS**	**X**

1. Model and input voltage
PPA12 - = Electrak PPA DC, 12 Vdc
PPA24 - = Electrak PPA DC, 24 Vdc
PPA36 - = Electrak PPA DC, 36 Vdc
PPA90 - = Electrak PPA DC, 90 Vdc [1]

2. Dynamic load capacity
18B65 - = 3330 N (750 lbf)
58B65 - = 6670 N (1500 lbf)

3. Ordering stroke length
04 = 4 inch (101.6 mm)
08 = 8 inch (203.2 mm)
12 = 12 inch (304.8 mm)
18 = 18 inch (457.2 mm)
24 = 24 inch (609.6 mm)
36 = 36 inch (914.4 mm)

4. Brake option
N = no brake option

5. Feedback option
XX = no feedback option
LS = end of stroke limit switches
PO = potentiometer [2]

6. Bellows option
X = no bellows
C = bellows

(1) Not CE compliant.
(2) Potentiometer + end of stroke limit switches not possible.

Electrak PPA – Electrical Connections

Without Option

Actuator supply voltage	[Vdc]	
PPA12		12
PPA24		24
PPA36		36
PPA90		90

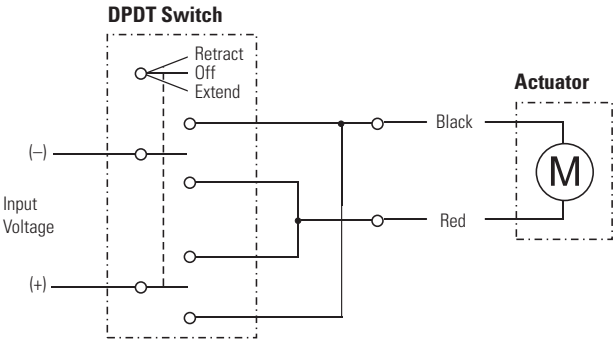

Connect the black lead to positive and red to negative to extend the actuator. Change polarity to retract the actuator.

With Option End of Stroke Limit Switches

Actuator supply voltage	[Vdc]	
PPA12		12
PPA24		24
PPA36		36
PPA90		90
Limit switches max. voltage	[V]	250
Limit switches max. current	[A]	15.1

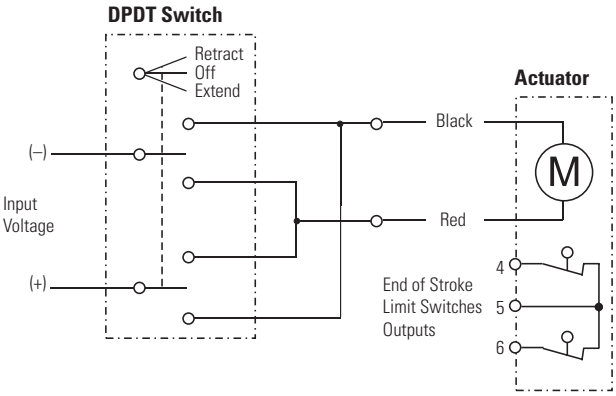

Connect the black lead to positive and red to negative to extend the actuator. Change polarity to retract the actuator. Limit switch outputs are on terminals 4 and 6, and they have a common voltage input on terminal 5.

With Option Potentiometer

Actuator supply voltage	[Vdc]	
PPA12		12
PPA24		24
PPA36		36
PPA90		90
Potentiometer type		wire-wound
Potentiometer max. voltage	[Vdc]	32
Potentiometer max. power	[W]	2
Potentiometer linearity	[%]	± 5
Potentiometer output resolution	[ohm/mm]	
4 inch stroke		98
8 inch stroke		49
12 inch stroke		33
18 inch stroke		22
24 inch stroke		16
36 inch stroke		11

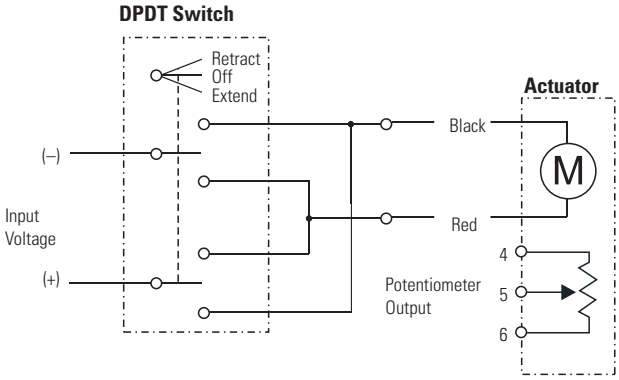

Connect the black lead to positive and red to negative to extend the actuator. Change polarity to retract the actuator. The potentiometer output has 0 ohm between terminal 4 and 5 when the actuator is fully retracted.

Electrak® PPA – Accessories

PPA Rear Clevis Mounting Kits

Designation	Compatible Actuators	Part Number
PPA rear clevis mounting kit type 1	Electrak PPA	7827320
PPA rear clevis mounting kit type 2	Electrak PPA	7824295

The rear clevis mounting kits are attached to the tube of an Electrak PPA actuator, allowing it to be mounted clevis to clevis style.

PPA Rear Clevis Mounting Kit - Type 1

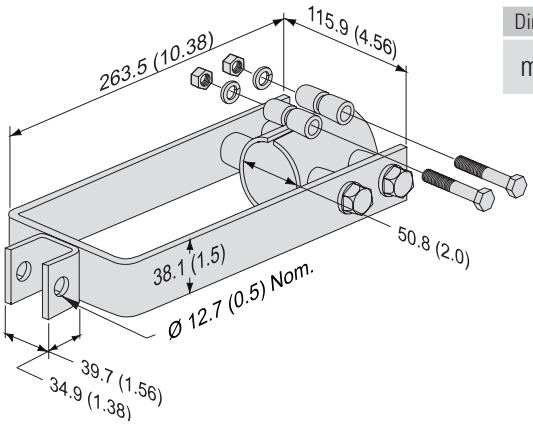

Dimensions
mm (in)

PPA Rear Clevis Mounting Kit - Type 2

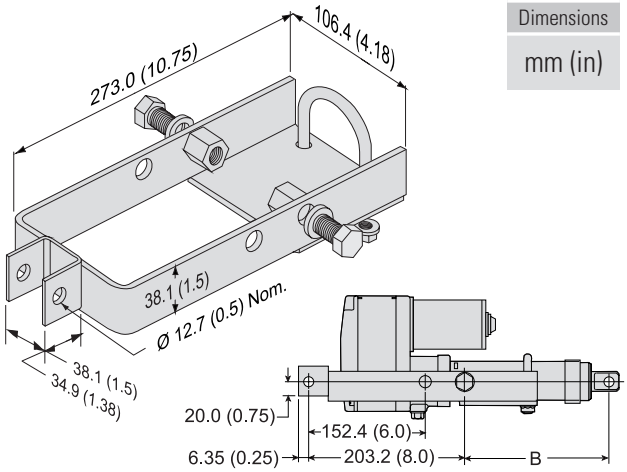

Dimensions
mm (in)

B: retracted length to trunnion, also see product pages.

PPA Tube Mounting Kits

Designation	Compatible Actuators	Part Number
Electrak PPA tube mount - light duty 3330 N	Electrak PPA	7822520
Electrak PPA tube mount - heavy-duty 6670 N	Electrak PPA	7821783

The tube mounting kits work as a clamp that is mounted at any desired position along the actuator tube. Trunnion pins for the tube mount clamp are supplied and mounted by the customer.

Electrak PPA Tube Mount - Light Duty 3330 N (750 lbf)

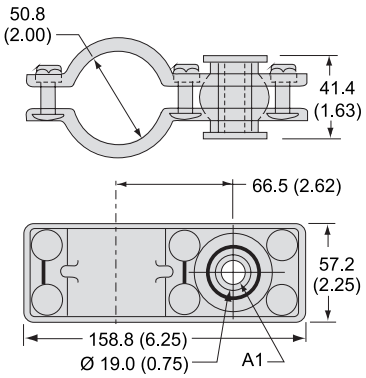

Dimensions
mm (in)

A1: hole diameter 12.7 mm (0.5 in) with bushing.

Electrak PPA Tube Mount - Heavy-duty 6670 N (1500 lbf)

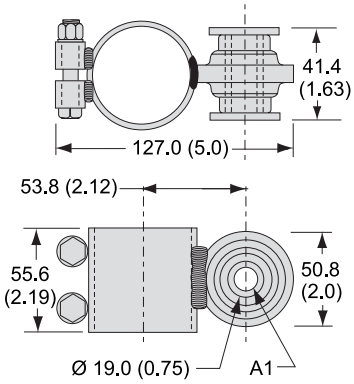

Dimensions
mm (in)

A1: hole diameter 12.7 mm (0.5 in) with bushing.

Notes

DMD – Technical Features

Standard Features

- Self supporting column in extruded anodized aluminum with high load torque capability
- 12 or 24 Vdc as standard input voltages
- Static load up to 18 kN (4000 lbf)
- Dynamic load up to 6.8 kN (1500 lbf)
- Stroke up to 24 inch
- Speed up to 71 mm/s (2.8 in/s)
- Protection class static IP65
- Rugged, robust and strong
- T-slot grooves along the entire profile
- Maintenance free

General Specifications

Screw type	acme or ball
Nut type DMDxxxxA (acme screw) DMDxxxxB (ball screw)	self locking lead nut load lock ball nut
Manual override	no
Anti-rotation	yes
Static load holding brake acme screw ball screw	 no (self-locking) yes
Safety features	overload clutch auto reset thermal switch
Electrical connections	cable with flying leads
Compliances	CE

Optional Electrical Features

Potentiometer feedback

Compatible Controls

Contact customer support at www.thomsonlinear.com/cs

DMD – Technical Specifications

Mechanical Specifications

Max. static load [1]	[N (lbf)]	
DMDxxxxA (acme screw)		11350 (2500)
DMDxxxxB (ball screw)		18000 (4000)
Max. dynamic load (Fx)	[N (lbf)]	
DMDxx05A5		1100 (250)
DMDxx10A5		2250 (500)
DMDxx20A5		2250 (500)
DMDxx05B5		2250 (500)
DMDxx10B5		4500 (1000)
DMDxx20B5		4500 (1000)
DMDxx21B5		6800 (1500)
Max. load torque, dyn. and static	[Nm (lbf-in)]	
DMDxx-xxA (acme screw)		565 (5000)
DMDxx-xxB (ball screw)		710 (6284)
Speed @ no load/max. load	[mm/s (in/s)]	
DMDxx05A5		54/32 (2.10/1.20)
DMDxx10A5		30/18 (1.20/0.70)
DMDxx20A5		15/12 (0.67/0.45)
DMDxx05B5		61/37 (2.40/1.40)
DMDxx10B5		30/19 (1.30/0.80)
DMDxx20B5		15/12 0.60/0.45)
DMDxx21B5		15/11 (0.60/043)
Min. ordering stroke (S) length	[in]	4
Max. ordering stroke (S) length [2]	[in]	24
Ordering stroke length increments	[in]	2
Operating temperature limits	[°C (F)]	- 25 – 65 (- 15 – 150)
Full load duty cycle @ 25 °C (77 °F)	[%]	25
End play, maximum	[mm (in)]	1.0 (0.04)
Protection class - static		IP65

(1) Max. static load at fully retracted stroke.

Electrical Specifications

Available input voltages [1]	[Vdc]	12, 24
Input voltage tolerance	[%]	± 10
Current draw @ no load/max. load [2]	[A]	
DMD1205A5		12.0/34.0
DMD1210A5		7.0/27.0
DMD1220A5		5.0/15.0
DMD1205B5		7.0/27.0
DMD1210B5		5.0/25.0
DMD1220B5		4.0/13.0
DMD1221B5		4.0/20.0
DMD2405A5		6.0/17.0
DMD2410A5		4.0/13.0
DMD2420A5		2.0/7.5
DMD2405B5		4.0/14.0
DMD2410B5		2.0/12.5
DMD2420B5		2.0/7.5
DMD2421B5		2.0/10.0
Cable length	[mm (in)]	2000 (79)
Cable diameter	[mm (in)]	9 (0.35)
Cable leads cross section	[mm^2 (AWG)]	
motor leads		2.5 (10)
potentiometer leads		1 (17)

(1) For other input voltages - contact customer support.
(2) For current draw for 36 Vdc input voltage models - contact customer support.

DMD – Dimensions

Dimensions	Projection
mm [inch]	

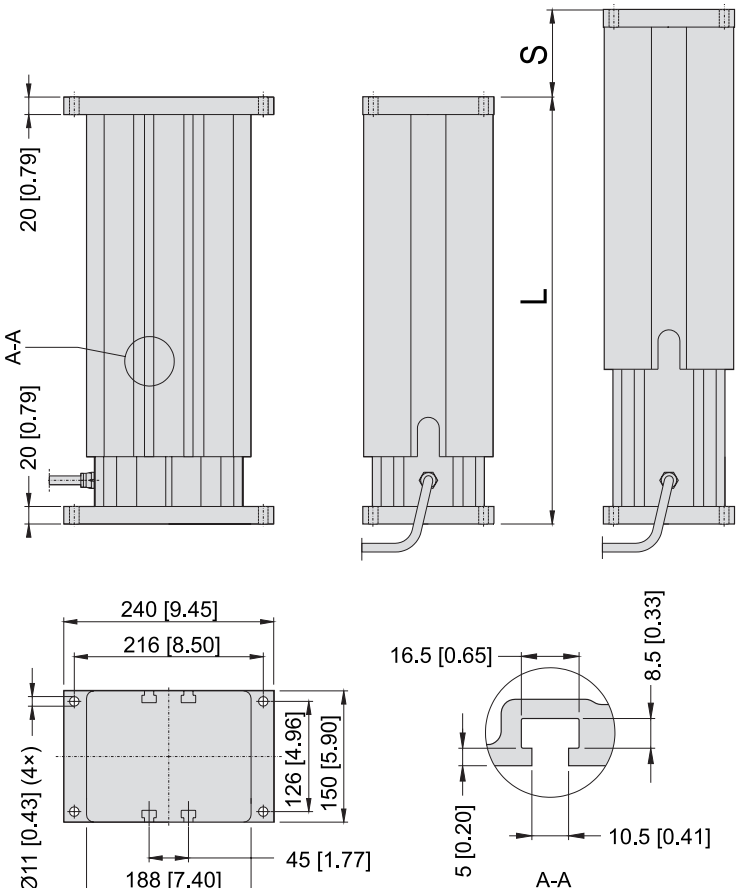

Stroke, Retracted Length and Weight Relationships

Ordering stroke (S)	[in]	4	6	8	10	12	14	16	18	20	24
Retracted length, acme screw models (A)	[mm]	329.6	380.4	431.2	482.0	532.8	633.6	684.4	735.2	786.0	887.6
	[in]	13.0	15.0	17.0	19.0	21.0	24.9	26.9	28.9	30.9	34.9
Retracted length, ball screw models (A)	[mm]	369.6	420.4	471.2	522.0	572.8	673.6	724.4	775.2	826.2	927.6
	[in]	14.6	16.6	18.6	20.6	22.6	26.5	28.5	30.5	32.5	36.5
Add on length for option potentiometer	[mm]	55.0									
	[in]	2.17									
Weight, acme screw models	[kg]	18.7	20.2	21.6	23.1	24.6	27.3	28.7	30.2	31.7	34.6
	[lbs]	41.2	44.5	47.6	50.9	54.2	60.2	63.3	66.6	69.9	76.3
Weight, ball screw models	[kg]	20.4	21.9	23.4	24.8	26.3	29.0	30.4	31.9	33.4	36.3
	[lbs]	45.0	48.3	51.6	54.7	58.0	63.9	67.0	70.3	73.6	80.0
Add on weight for option potentiometer	[kg]	1.3									
	[lbs]	2.9									

DMD – Performance Diagrams

Speed and Current vs. Load - Diagram 1

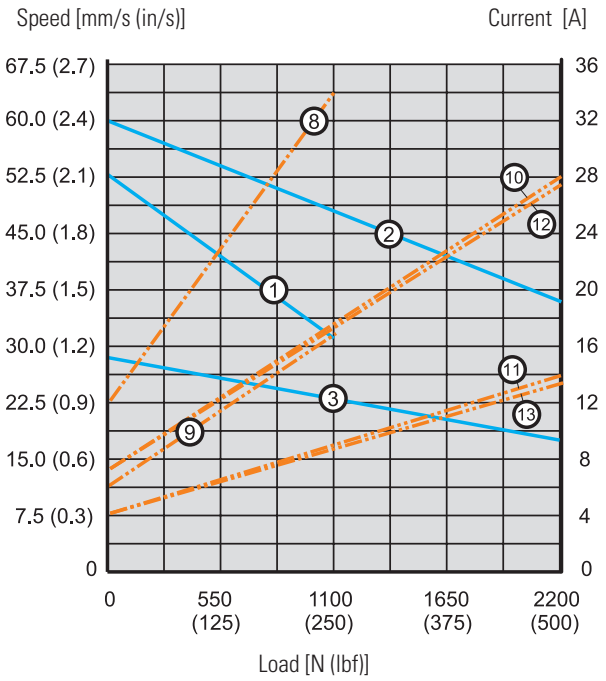

Speed and Current vs. Load - Diagram 2

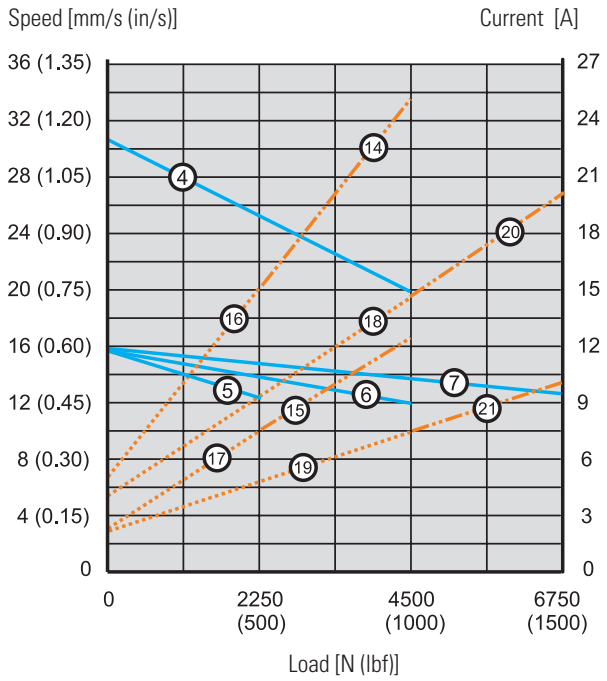

Speed Curves Diagram 1
1: DMDxx05A5
2: DMDxx05B5
3: DMDxx10A5

Current Curves Diagram 1
8: DMD1205A5
9: DMD2405A5
10: DMD1205B5
11: DMD2405B5
12: DMD1210A5
13: DMD2410A5

Speed Curves Diagram 2
4: DMDxx10B5
5: DMDxx20A5
6: DMDxx20B5
7: DMDxx21B5

Current Curves Diagram 2
14: DMD1210B5
15: DMD2410B5
16: DMD1220A5
17: DMD2420A5
18: DMD1220B5
19: DMD2420B5
20: DMD1221B5
21: DMD2421B5

Contact customer service for data on 36 Vdc models.

Off Center Load Capacity

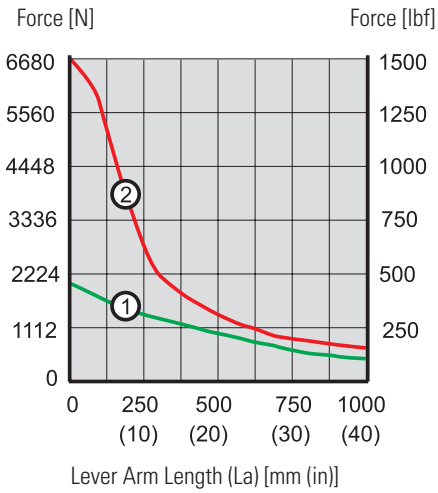

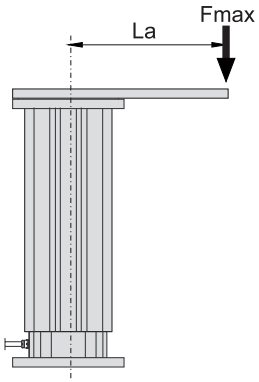

1: Acme screw models
2: Ball screw models

DMD – Ordering Key

Ordering Key

1	2	3	4
DMD12-	**05A5-**	**10**	**PO**

1. Model and input voltage
DMD12- = lifting column type DMD, 12 Vdc
DMD24- = lifting column type DMD, 24 Vdc

2. Screw type, dynamic load capacity
05A5 - = 1100 N, acme, 54 mm/s
10A5 - = 2250 N, acme, 30 mm/s
20A5 - = 2250 N, acme, 15 mm/s
05B5 - = 2250 N, ball, 61 mm/s
10B5 - = 4500 N, ball, 30 mm/s
20B5 - = 4500 N, ball, 15 mm/s
21B5 - = 6800 N, ball, 15 mm/s

3. Ordering stroke length (1)
04 = 4 inch (101.6 mm)
06 = 6 inch (152.4 mm)
08 = 8 inch (203.2 mm)
10 = 10 inch (254.0 mm)
12 = 12 inch (304.8 mm)
14 = 14 inch (355.6 mm)
16 = 16 inch (406.4 mm)
18 = 18 inch (457.2 mm)
20 = 20 inch (508.0 mm)
24 = 24 inch (609.6 mm)

4. Options (2)
PO = potentiometer

(1) Other stroke lengths available upon request. Contact customer support.
(2) Leave position blank for no option.

DMD – Accessories

T-Slot Bolt

Designation	Part Number
M10 T-slot bolt	D800041

The T-slot bolt fits in to the T-slot running along the outer profile of the lifting column. The T-slot bolts can be used to mount the unit instead of using the upper mounting plate, or/and for attaching other components to the profile.

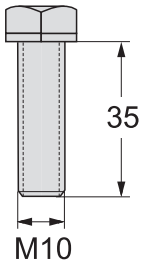

Dimensions
mm

DMD – Electrical Connections

Without Option

Actuator supply voltage	[Vdc]	
DMD12		12
DMD24		24

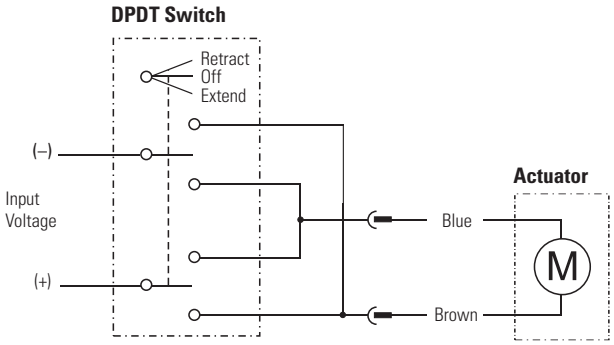

Connect the brown lead to positive and blue to negative to extend the actuator. Change polarity to retract the actuator.

Option Potentiometer

Actuator supply voltage	[Vdc]	
DMD12		12
DMD24		24
Potentiometer type		wire-wound
Potentiometer max. input voltage	[Vdc]	32
Potentiometer max. power	[W]	2
Potentiometer linearity	[%]	± 0.25
Potentiometer output resolution	[ohm/mm]	
2 - 10 inch stroke		39
11 - 20 inch stroke		20
21 - 24 inch stroke		10

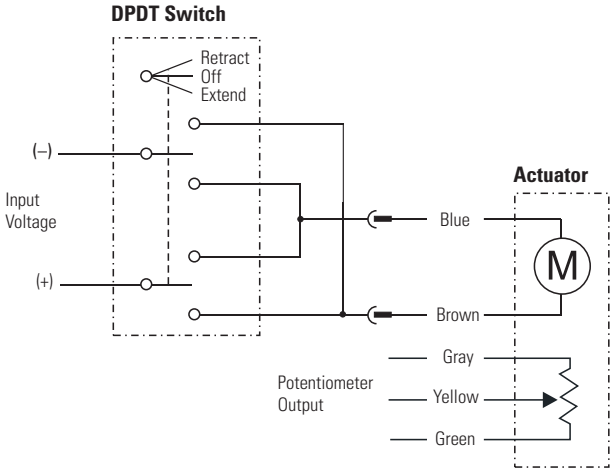

Connect the brown lead to positive and blue to negative to extend the actuator. Change polarity to retract the actuator. The potentiometer output has 0 ohm between gray and yellow when the actuator is fully extended.

DMA – Technical Features

Standard Features

- Self-supporting column in extruded anodized aluminium with high load torque capability
- 1 × 230 Vac standard input voltage
- Static load up to 18 kN (4000 lbf)
- Dynamic load up to 9 kN (2000 lbf)
- Stroke up to 24 inch
- Speed up to 71 mm/s (2.8 in/s)
- Protection class static IP45
- Rugged, robust and strong
- T-slot grooves along the entire profile
- Maintenance free

General Specifications

Screw type	acme or ball
Nut type DMDxx-xxA (acme screw) DMDxx-xxB (ball screw)	self-locking lead nut load lock ball nut
Manual override	no
Anti-rotation	yes
Static load holding brake acme screw ball screw	 no (self-locking) yes
Safety features	overload clutch auto reset thermal switch
Electrical connections	cable with flying leads
Compliances	CE

Accessories

T-slot bolts

Compatible Controls

Contact customer support at www.thomsonlinear.com/cs

DMA – Technical Specifications

Mechanical Specifications

Max. static load [1]	[N (lbf)]	
DMA22xxA (acme screw)		11350 (2500)
DMA22xxB (ball screw)		18000 (4000)
Max. dynamic load (Fx)	[N (lbf)]	
DMA2205A5		1100 (250)
DMA2210A5		2250 (500)
DMA2220A5		2250 (500)
DMA2205B5		2250 (500)
DMA2210B5		4500 (1000)
DMA2220B5		4500 (1000)
DMA2221B5		6800 (1500)
Max. load torque, dyn. and static	[Nm (lbf-in)]	
DMAxxxxA (acme screw)		565 (5000)
DMAxxxxB (ball screw)		710 (6284)
Speed @ no load/max. load	[mm/s (in/s)]	
DMA2205A5		54/32 (2.10/1.20)
DMA2210A5		30/18 (1.20/0.70)
DMA2220A5		15/12 (0.67/0.45)
DMA2205B5		61/37 (2.40/1.40)
DMA2210B5		30/19 (1.30/0.80)
DMA2220B5		15/12 0.60/0.45)
DMA2221B5		15/11 (0.60/043)
Min. ordering stroke (S) length	[in]	4
Max. ordering stroke (S) length	[in]	24
Ordering stroke length increments	[in]	2
Operating temperature limits	[°C (F)]	- 25 – 65 (- 15 – 150)
Max. on time	[s]	45
Full load duty cycle @ 25 °C (77 °F)	[%]	25
End play, maximum	[mm (in)]	1.0 (0.04)
Protection class - static, standard (optional)		IP45

(1) Max. static load at fully retracted stroke.

Electrical Specifications

Available input voltages	[Vac]	1 × 230 [1]
Input voltage tolerance	[%]	± 10
Current draw @ no load/max. load	[A]	
DMA2205A5		1.10/1.55
DMA2210A5		0.85/1.30
DMA2220A5		0.95/1.25
DMA2205B5		0.85/1.30
DMA2210B5		0.85/1.30
DMA2220B5		0.85/1.30
DMA2221B5		0.85/1.25
Cable length	[mm (in)]	0.6 (24)
Cable diameter	[mm (in)]	9 (0.35)
Cable leads cross section	[mm^2 (AWG)]	2.5 (14)

(1) Capacitor 10 µF (p/n 9200-448-003) required to run the actuator.

DMA – Dimensions

Dimensions	Projection
mm [inch]	

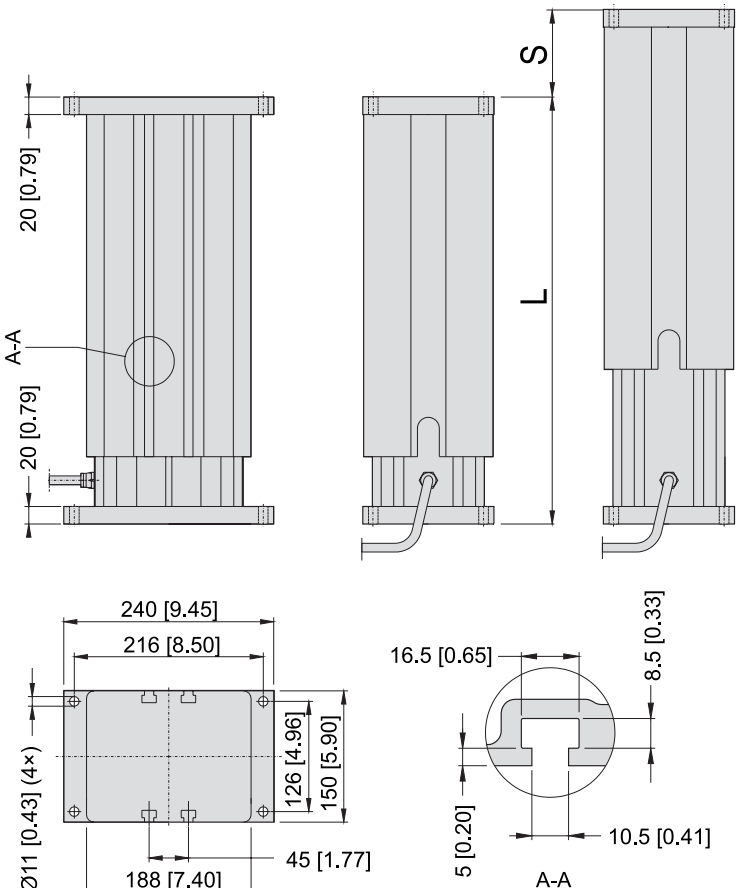

Stroke, Retracted Length and Weight Relationships

Ordering stroke (S)	[in]	4	6	8	10	12	14	16	18	20	24
Retracted length, acme screw models (A)	[mm]	329.6	380.4	431.2	482.0	532.8	633.6	684.4	735.2	786.0	887.6
	[in]	13.0	15.0	17.0	19.0	21.0	24.9	26.9	28.9	30.9	34.9
Retracted length, ball screw models (A)	[mm]	369.6	420.4	471.2	522.0	572.8	673.6	724.4	775.2	826.2	927.6
	[in]	14.6	16.6	18.6	20.6	22.6	26.5	28.5	30.5	32.5	36.5
Weight, acme screw models	[kg]	20.9	22.4	23.8	25.3	26.8	29.5	30.9	32.4	33.9	36.8
	[lbs]	46.1	49.4	52.5	55.8	59.1	65.0	68.1	71.4	74.7	81.1
Weight, ball screw models	[kg]	22.6	24.1	25.6	27.0	28.5	31.2	32.6	34.1	35.6	38.6
	[lbs]	49.8	53.1	56.4	59.5	62.8	68.8	71.9	75.2	78.5	85.1

DMA – Performance Diagrams

Speed and Current vs. Load - Diagram 1

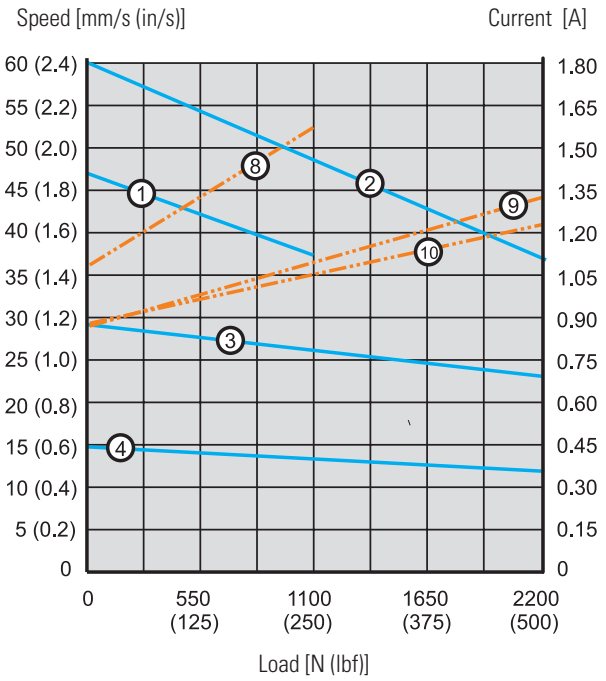

Speed and Current vs. Load - Diagram 2

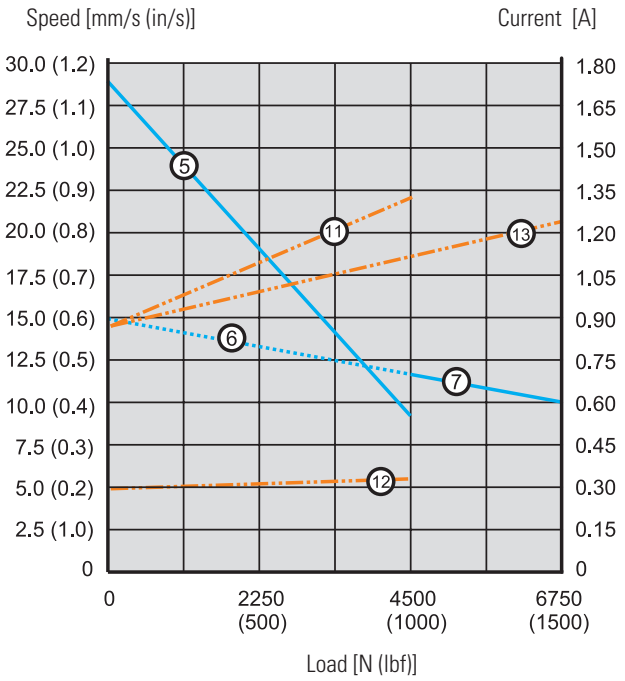

Speed Curves Diagram 1
1: DMA2205A5
2: DMA2205B5
3: DMA2210A5
4: DMA2220A5

Current Curves Diagram 1
8: DMA2205A5
9: DMA2205B5(10A5)
10: DMA2220A5

Speed Curves Diagram 2
5: DMA2210B5
6: DMA2220B5
7: DMA2221B5

Current Curves Diagram 2
11: DMA2210B5(20B5)
12: DMA2220B5
13: DMA2221B5

Off Center Load Capacity

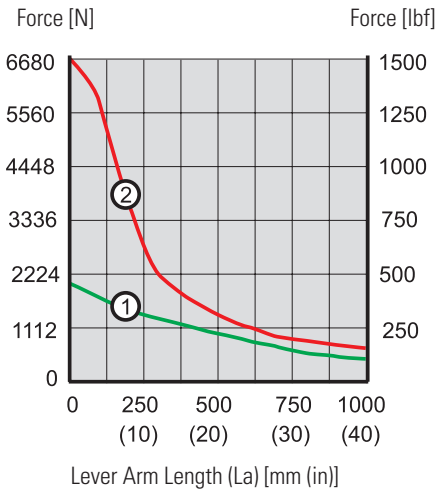

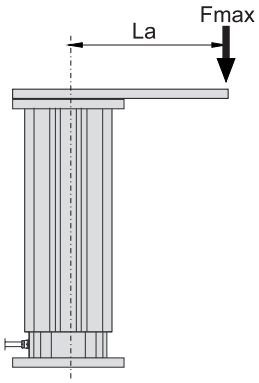

1: Acme screw models
2: Ball screw models

DMA – Ordering Key

Ordering Key

1	2	3
DMA22	**05A5-**	**10**

1. Model and input voltage
DMA22 = lifting column type DMA, 1 × 230 Vac

2. Screw type, dynamic load capacity
05A5 - = 1100 N, acme, 54 mm/s
10A5 - = 2250 N, acme, 30 mm/s
20A5 - = 2250 N, acme, 15 mm/s
05B5 - = 2250 N, ball, 61 mm/s
10B5 - = 4500 N, ball, 30 mm/s
20B5 - = 4500 N, ball, 15 mm/s
21B5 - = 6800 N, ball, 15 mm/s

3. Ordering stroke length (1)
04 = 4 inch (101.6 mm)
06 = 6 inch (152.4 mm)
08 = 8 inch (203.2 mm)
10 = 10 inch (254.0 mm)
12 = 12 inch (304.8 mm)
14 = 14 inch (355.6 mm)
16 = 16 inch (406.4 mm)
18 = 18 inch (457.2 mm)
20 = 20 inch (508.0 mm)
24 = 24 inch (609.6 mm)

(1) Other stroke lengths available upon request. Please contact customer support.
(2) Leave position blank for no option.

DMA – Accessories

T-Slot Bolt

Designation	Part Number
M10 T-slot bolt	D800041

The T-slot bolt fits in to the T-slot running along the outer profile of the lifting column. The T-slot bolts can be used to mount the unit instead of using the upper mounting plate, or/and for attaching other components to the profile.

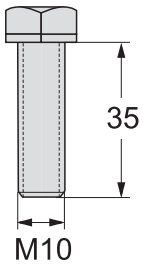

Dimensions
mm

DMA – Electrical Connections

Input Voltage 230 Vac	
Actuator supply voltage [Vac] DMA22	1 × 230

Acme screw models (no anti-coast brake)

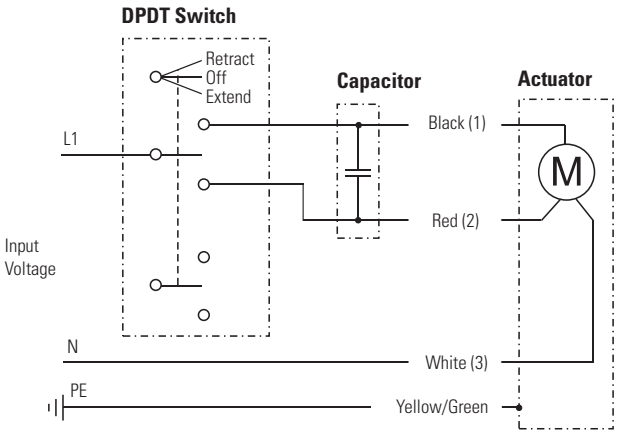

Ball screw models (with anti-coast brake)

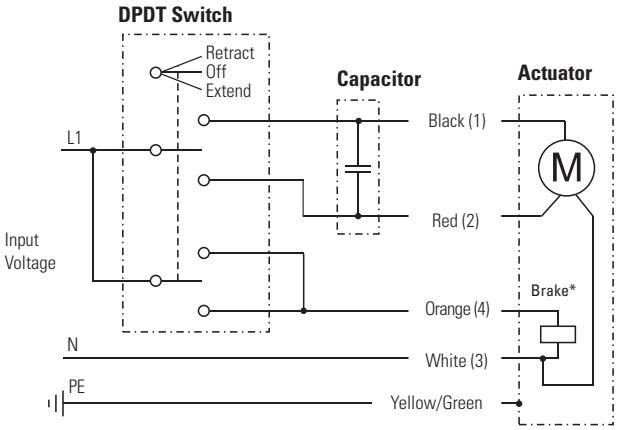

Leads can be either color or number marked. To be able to run the actuator, a 10 µF capacitor must be connected between black (1) and red (2) leads. See page 112 for ordering of capacitors. Connect black (1) lead to L1 and white (3) lead to N (neutral) to retract the actuator. Change L1 from lead black (1) to lead red (2) to extend the actuator. Ball screw models have an anti-coast brake*, that must be released during motion, which is done by connecting orange (4) lead to L1. Acme models do not have any anti-coast brake.

LM80-H – Technical Features

Standard Features

- Rodless actuator for horizontal operation
- For use in domestic, office or medical applications
- Rigid, self-supporting extruded aluminium profile
- Durable and corrosion free
- Lightweight with quiet operation
- Safety nut on ball screw versions
- Easy and fast T-slot mounting
- Maintenance free

General Specifications

Screw type	trapezoidal or ball
Nut type trapezoidal screw ball screw	 polymer lead nut load lock ball nut
Manual override	no
Anti-rotation	yes
Static load holding brake	no
Safety features	spring loaded soft stop
Electrical connections with motor enclosure without motor enclosure	 cable with connector cable clips directly on motor
Compliances	CE

Optional Mechanical Features

No motor enclosure
Manual override
Alternative motor positions
Special stroke or stroke over 1500 mm (contact customer support)

Optional Electrical Features

Encoder feedback (contact customer support)

Accessories

T-slot mounting kit

Compatible Controls

Contact customer support at www.thomsonlinear.com/cs

LM80-H – Technical Specifications

Mechanical Specifications

Max. load (Fb) (1)	[N (lbf)]	2000 (450)
Max. load torque (Mb) (1)	[N (lbf)]	
DTxx-T68M xxxxx H		250 (56)
DTxx -B61M xxxxx H		400 (90)
DTxx -B62M xxxxx H		180 (40)
DTxx -B65M xxxxx H		750 (169)
Speed @ no load/max. load	[mm/s (in/s)]	
DTxx-T68M xxxxx H		44/37 (1.7/1.5)
DTxx -B61M xxxxx H		55/50 (2.2/2.0)
DT12 -B62M xxxxx H		110/73 (4.3/2.9)
DT24 -B62M xxxxx H		11/87 (0.4/3.4)
DTxx -B65M xxxxx H		28/28 (1.1/1.1)
Min. ordering stroke (S) length (2)	[mm]	500
Max. ordering stroke (S) length (2)	[mm]	1500
Ordering stroke length increments (2)	[mm]	100
Operating temperature limits	[°C (F)]	0 – 40 (32 – 104)
Full load duty cycle @ 20 °C (68 °F)	[%]	15
End play, maximum	[mm (in)]	1.0 (0.04)
Protection class - static		
with motor enclosure		IP44
without motor enclosure		IP33

(1) See below for definition of forces.

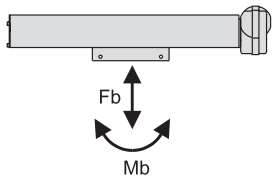

(2) For other stroke lengths, contact customer support.

Electrical Specifications

Available input voltages	[Vdc]	
DT12		12
DT24		24
Input voltage tolerance	[%]	± 10
Current draw @ no load/max. load	[A]	
DT12-T68MxxxxxH		5.5/6.0
DT24-T(B)68(1)MxxxxxH		3.0/5.0
DT12-B61MxxxxxH		6.0/8.0
DT12-B62MxxxxxH		6.0/15.0
DT24-B62MxxxxxH		3.0/7.0
DT12-B65MxxxxxH		5.8/5.8
DT24-B65MxxxxxH		2.8/2.8
Motor cable length	[m (in)]	
with motor enclosure		2000 (79)
without motor enclosure		-
Motor cable diameter	[mm (in)]	
with motor enclosure		5.7 (0.22)
without motor enclosure		-
Motor cable leads cross section	[mm^2 (AWG)]	
with motor enclosure		1.5 (16)
without motor enclosure		-

LM80-H – Dimensions

! Note: this unit may only be mounted horizontally

Dimensions	Projection
mm [inch]	

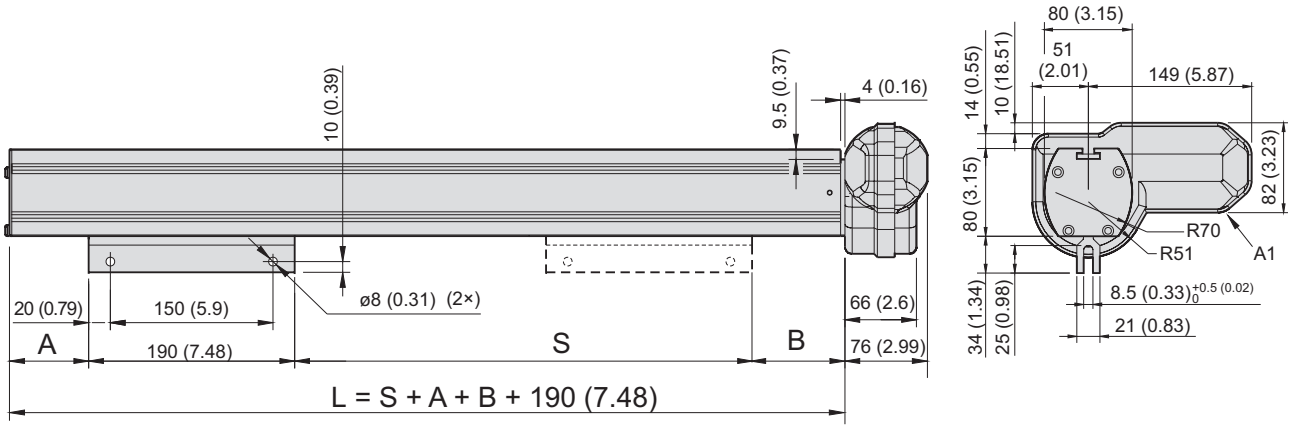

S: stroke
L: length of profile
A1: motor shown in position A (standard position)

Stroke, Profile Length and Weight Relationships

Ordering stroke (S)	[mm]	500	600	700	800	900	1000	1100	1200	1300	1400	1500
Dimension (A) / (B) DTxx -T68M xxxxx H	[mm]	54.0 / 77.0										
	[in]	2.1 / 3.0										
Dimension (A) / (B) DTxx -B61M xxxxx H	[mm]	102.0 / 77.0										
	[in]	4.0 / 3.0										
Dimension (A) / (B) DTxx -B62M xxxxx H	[mm]	102.0 / 77.0										
	[in]	4.0 / 3.0										
Dimension (A) / (B) DTxx -B65M xxxxx H	[mm]	79.0 / 77.0										
	[in]	1.9 / 3.0										
Weight DTxx -T68M xxxxx H	[kg]	11.2	13.1	14.8	16.6	18.1	20.2	22.0	23.8	25.5	27.4	29.1
	[lbs]	24.6	28.8	32.6	36.5	39.8	44.4	48.4	52.36	56.1	60.3	64.0
Weight DTxx -B61M xxxxx H	[kg]	12.1	13.9	15.7	17.5	19.3	21.0	22.9	24.6	26.3	28.2	30.0
	[lbs]	30.3	30.6	34.5	38.5	42.7	46.2	50.4	54.1	57.9	62.0	66.0
Weight DTxx -B62M xxxxx H	[kg]	12.1	13.9	15.7	17.5	19.3	21.0	22.9	24.6	26.3	28.2	30.0
	[lbs]	30.3	30.6	34.5	38.5	42.7	46.2	50.4	54.1	57.9	62.0	66.0
Weight DTxx -B65M xxxxx H	[kg]	11.7	13.5	15.3	17.1	18.9	20.6	22.4	24.2	26.0	27.8	29.6
	[lbs]	25.7	29.7	33.7	37.6	41.6	45.3	49.3	53.2	57.2	61.2	65.1

LM80-H – Performance Diagrams

Speed and Current vs. Load

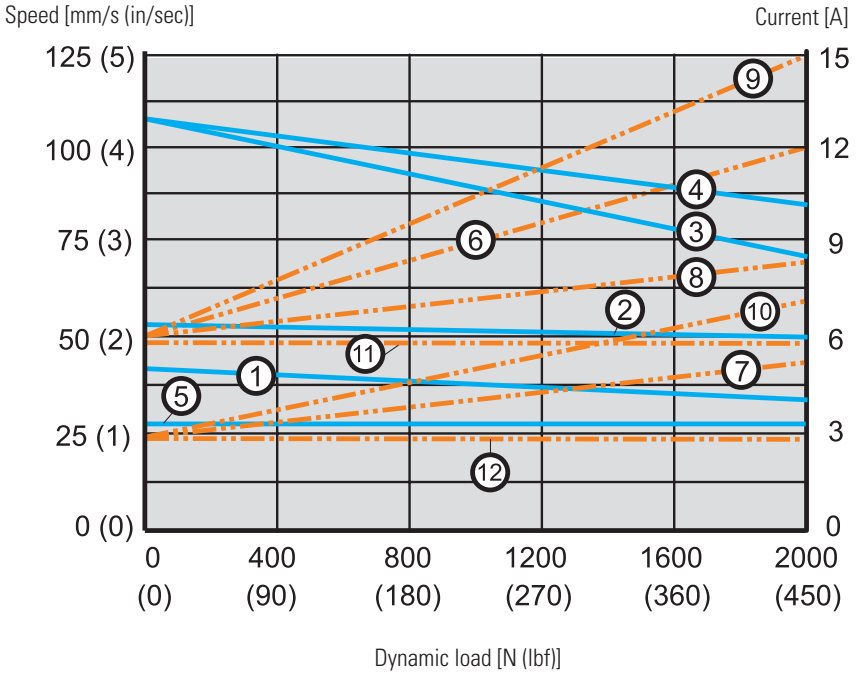

Speed

1: DTxx-T68MxxxxxH
2: DTxx-B61MxxxxxH
3: DT12-B62MxxxxxH
4: DT24-B62MxxxxxH
5: DTxx-B65MxxxxxH

Current

6: DT12-T68MxxxxxH
7: DT24-T(B)68(1)MxxxxxH
8: DT12-B61MxxxxxH
9: DT12-B62MxxxxxH
10: DT24-B62MxxxxxH
11: DT12-B65MxxxxxH
12: DT24-B65MxxxxxH

Maximum Permissible Deflection of Profile

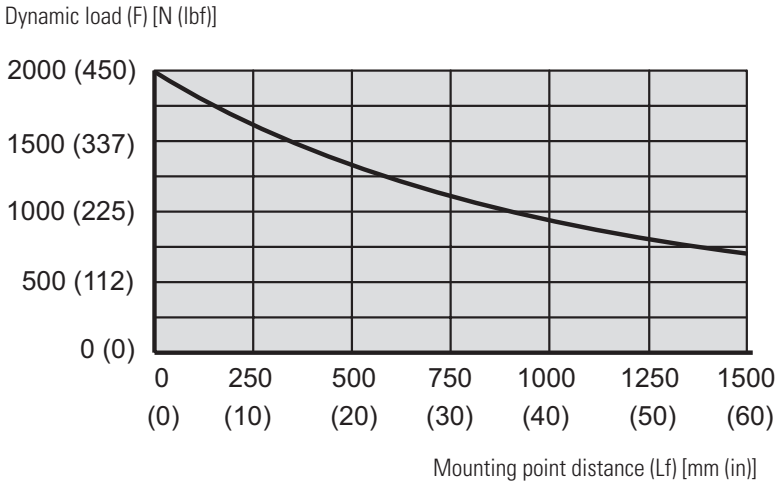

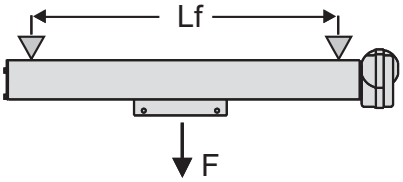

LM80-H – Ordering Key

Ordering Key

1	2	3	4	5	6	7
DT12-	**B62M-**	**100**	**A**	**C**	**H**	**X**

1. Model and input voltage
DT12 - = LM80, 12 Vdc
DT24 - = LM80, 24 Vdc

2. Load torque capacity and screw type
T68M - = 250 N (56 lbf), trapezoidal screw
B61M - = 400 N (90 lbf), ball screw
B62M - = 180 N (40 lbf), ball screw
B65M - = 750 N (169 lbf), ball screw

3. Ordering stroke length
050 = 500 mm
060 = 600 mm
070 = 700 mm
080 = 800 mm
090 = 900 mm
100 = 1000 mm
110 = 1100 mm
120 = 1200 mm
130 = 1300 mm
140 = 1400 mm
150 = 1500 mm

4. Motor orientation
A = 0° (standard)
B = 60°
C = 120°
D = 180°
F = 300°

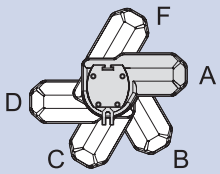

5. Motor enclosure
C = with enclosure (IP44)
U = no enclosure (IP33)

6. Mounting orientation
H = horizontal

7. Options
X = no option
H = manual override [1]

(1) Manual override dimensions

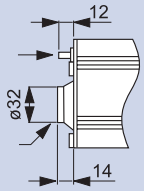

Hexagon socket with plastic cover (4 mm Allen key included)

LM80-H – Accessories

T-Slot Mounting Kit

Designation	Part Number
M8 T-slot mounting kit	D680507

The T-slot mounting kit consists of four T-slot bolts, washers and nuts that fit in to the T-slot running along the profile. The T-slot mounting kit can be used to mount the unit or/and for attaching other components to the profile.

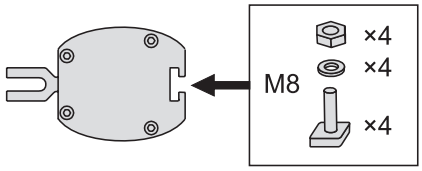

LM80-H – Electrical Connections

Without Option (standard)	
Actuator supply voltage [Vdc]	
DT12	12
DT24	24

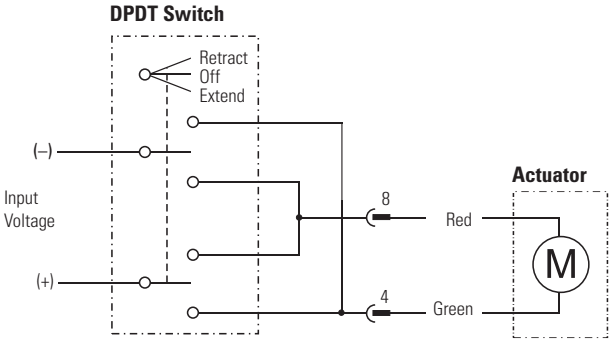

Connector pin configuration (front view)

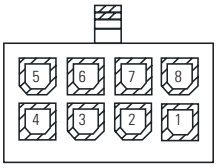

Connect the green lead (connector pin 4) to positive and red (pin 8) to negative to extend the actuator. Change polarity to retract the actuator.

LM80-V – Technical Features

Standard Features

- Rodless actuator for vertical operation with motor down
- For use in domestic, office or medical applications
- Rigid, self-supporting extruded aluminium profile
- Durable and corrosion free
- Holding brake prevents downward motion at power off
- Lightweight with quiet operation
- Safety nut on ball screw versions
- Easy and fast T-slot mounting
- Optional spline safety function
- Maintenance free

General Specifications

Screw type	trapezoidal or ball
Nut type trapezoidal screw ball screw	 polymer lead nut load lock ball nut
Manual override	no
Anti-rotation	yes
Static load holding brake	yes
Safety features	spring loaded soft stop
Electrical connections with motor enclosure without motor enclosure	 cable with connector cable clips directly on motor
Compliances	CE

Optional Mechanical Features

No motor enclosure
Manual override
Alternative motor positions
Spline safety function
Special stroke or stroke over 1500 mm (contact customer support)

Optional Electrical Features

Encoder feedback (contact customer support)

Accessories

T-slot mounting kit

Compatible Controls

Contact customer support at www.thomsonlinear.com/cs

LM80-V – Technical Specifications

Mechanical Specifications

Max. load (Fa) [1]	[N (lbf)]	
DTxx-T68MxxxxxV(F)		650 (146)
DTxx -B61MxxxxxV(F)		1000 (225)
DTxx -B62MxxxxxV(F)		450 (101)
DTxx -B65MxxxxxV(F)		2000 (450)
Max. load torque (Ma) [1]	[Nm (lbf-in)]	
DTxx-T68MxxxxxV(F)		250 (2213)
DTxx -B61MxxxxxV(F)		400 (3540)
DTxx -B62MxxxxxV(F)		180 (1593)
DTxx -B65MxxxxxV(F)		750 (6638)
Speed @ no load/max. load	[mm/s (in/s)]	
DT12-T68MxxxxxV(F)		44/29 (1.7/1.1)
DT24-T68MxxxxxV(F)		44/35 (1.7/1.4)
DT12-B61MxxxxxV(F)		55/37 (2.2/1.5)
DT24-B61MxxxxxV(F)		55/43 (2.2/1.7)
DT12-B62MxxxxxV(F)		110/67 (4.3/2.6)
DT24-B62MxxxxxV(F)		110/83 (4.3/3.3)
DT12-B65MxxxxxV(F)		28/19 (1.1/0.7)
DT24-B65MxxxxxV(F)		28/22 (1.1/0.9)
Min. ordering stroke (S) length [2]	[mm]	500
Max. ordering stroke (S) length [2]	[mm]	1500
Ordering stroke length increments [2]	[mm]	100
Operating temperature limits	[°C (F)]	0 – 40 (32 – 104)
Full load duty cycle @ 20 °C (68 °F)	[%]	15
Maximum on time	[s]	120
Protection class - static		
with motor enclosure		IP44
without motor enclosure		IP33

(1) See below for definition of forces.

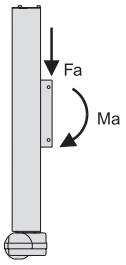

(2) For other stroke lengths, contact customer support.

Electrical Specifications

Available input voltages	[Vdc]	
DT12		12
DT24		24
Input voltage tolerance	[%]	± 10
Current draw @ no load/max. load	[A]	
DT12-T68MxxxxxV(F)		6.3/17.0
DT24-T68MxxxxxV(F)		3.0/6.0
DT12-B61MxxxxxV(F)		6.3/17.0
DT24-B61MxxxxxV(F)		3.0/6.0
DT12-B62MxxxxxV(F)		6.3/17.0
DT24-B62MxxxxxV(F)		3.0/6.0
DT12-B65MxxxxxV(F)		6.3/17.0
DT24-B65MxxxxxV(F)		3.0/6.0
Motor cable length	[m (in)]	
with motor enclosure		2000 (79)
without motor enclosure		-
Motor cable diameter	[mm (in)]	
with motor enclosure		5.7 (0.22)
without motor enclosure		-
Motor cable leads cross section	[mm^2 (AWG)]	
with motor enclosure		1.5 (16)
without motor enclosure		-

LM80-V – Dimensions

! Note: this unit may only be mounted vertically with the motor down even if drawing shows it horizontally

Dimensions	Projection
mm [inch]	

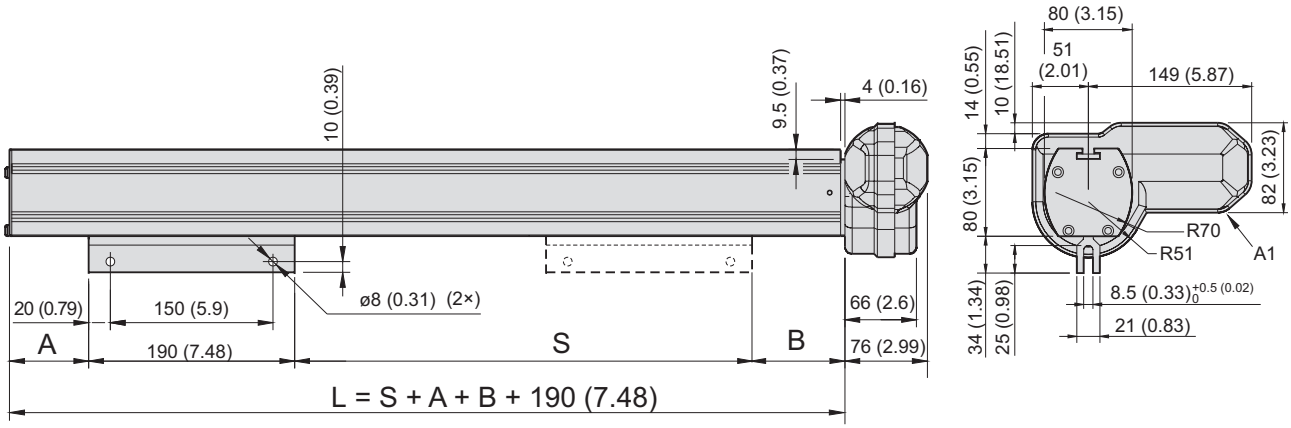

S: stroke
L: length of profile
A1: motor shown in position A (standard position)

Stroke, Profile Length and Weight Relationships

Ordering stroke (S)	[mm]	500	600	700	800	900	1000	1100	1200	1300	1400	1500
Dimension (A) / (B) DTxx -T68M xxxxx V(F)	[mm]	50.0 / 71.0 (50.0 / 90.0)										
	[in]	2.0 / 2.8 (2.0 / 3.5)										
DTxx -B61M xxxxx V(F) Dimension (A) / (B)	[mm]	53.0 / 120.0 (53.0 / 144.0)										
	[in]	2.1 / 4.7 (2.1 / 5.7)										
DTxx -B62M xxxxx V(F) Dimension (A) / (B)	[mm]	53.0 / 120.0 (53.0 / 144.0)										
	[in]	2.1 / 4.7 (2.1 / 5.7)										
DTxx -B65M xxxxx V(F) Dimension (A) / (B)	[mm]	53.0 / 97.0 (53.0 / 126.0)										
	[in]	2.1 / 3.8 (2.1 / 5.0)										
Weight DTxx -T68M xxxxx V(F)	[kg]	11.1 (11.6)	12.9 (13.4)	14.7 (15.2)	16.5 (17.0)	18.2 (18.7)	20.0 (20.5)	21.8 (22.3)	23.6 (24.1)	25.4 (25.9)	27.2 (27.7)	28.9 (29.4)
	[lbs]	24.2 (25.5)	28.4 (29.5)	32.3 (33.4)	36.3 (37.4)	40.0 (41.1)	44.0 (45.1)	48.0 (49.0)	51.9 (53.0)	55.9 (57.0)	59.8 (60.9)	63.6 (64.7)
Weight DTxx -B61M xxxxx V(F)	[kg]	11.6 (12.1)	13.4 (13.9)	15.2 (15.7)	17.0 (17.5)	18.7 (19.2)	20.5 (21.0)	22.3 (22.8)	24.1 (24.6)	25.9 (26.4)	27.7 (28.2)	29.5 (30.0)
	[lbs]	25.5 (26.6)	29.5 (30.6)	33.4 (34.5)	37.4 (38.5)	41.1 (42.2)	45.1 (46.2)	52.4 (50.2)	53.0 (54.1)	57.0 (58.1)	61.0 (62.0)	64.9 (66.0)
Weight DTxx -B62M xxxxx V(F)	[kg]	11.6 (12.1)	13.4 (13.9)	15.2 (15.7)	17.0 (17.5)	18.7 (19.2)	20.5 (21.0)	22.3 (22.8)	24.1 (24.6)	25.9 (26.4)	27.7 (28.2)	29.5 (30.0)
	[lbs]	25.5 (26.6)	29.5 (30.6)	33.4 (34.5)	37.4 (38.5)	41.1 (42.2)	45.1 (46.2)	52.4 (50.2)	53.0 (54.1)	57.0 (58.1)	61.0 (62.0)	64.9 (66.0)
Weight DTxx -B65M xxxxx V(F)	[kg]	12.0 (12.5)	13.8 (14.3)	15.6 (16.1)	17.6 (18.1)	19.3 (19.8)	21.1 (21.6)	22.9 (23.4)	24.7 (25.2)	26.5 (27.0)	28.2 (28.7)	30.1 (30.6)
	[lbs]	26.4 (27.5)	30.4 (31.5)	34.3 (35.4)	38.7 (39.8)	42.5 (43.6)	46.4 (47.5)	50.4 (51.5)	54.3 (55.4)	58.3 (59.4)	62.0 (63.1)	66.2 (67.3)

LM80-V – Performance Diagrams

Speed and Current vs. Load

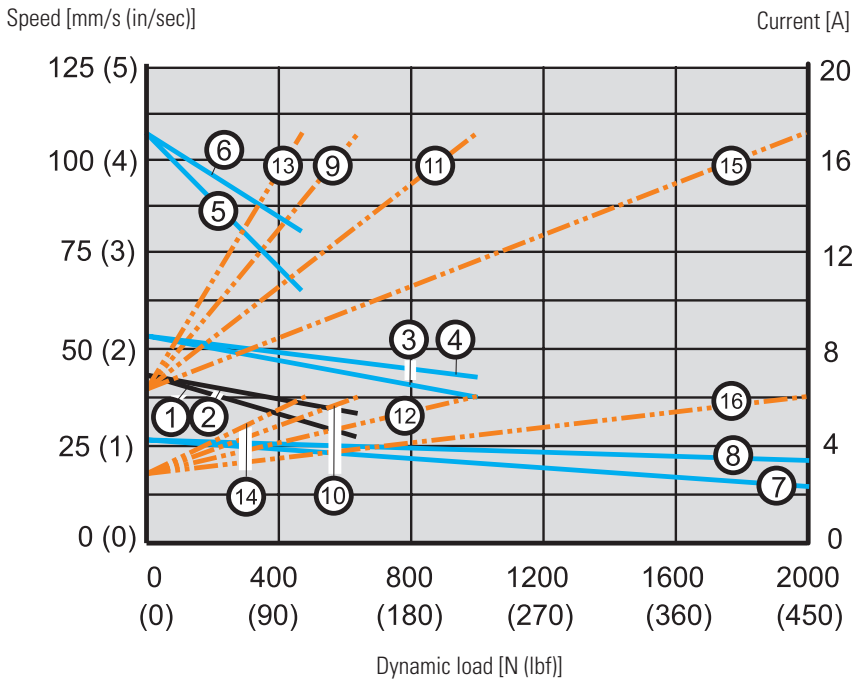

Speed

1: DT12-T68MxxxxxV(F)
2: DT24-T68MxxxxxV(F)
3: DT12-B61MxxxxxV(F)
4: DT24-B61MxxxxxV(F)
5: DT12-B62MxxxxxV(F)
6: DT14-B62MxxxxxV(F)
7: DT12-B65MxxxxxV(F)
8: DT24-B65MxxxxxV(F)

Current

9: DT12-T68MxxxxxV(F)
10: DT24-T68MxxxxxV(F)
11: DT12-B61MxxxxxV(F)
12: DT24-B61MxxxxxV(F)
13: DT12-B62MxxxxxV(F)
14: DT24-B62MxxxxxV(F)
15: DT12-B65MxxxxxV(F)
16: DT24-B65MxxxxxV(F)

LM80-V – Ordering Key

Ordering Key

1	2	3	4	5	6	7
DT12-	**B62M-**	**100**	**A**	**C**	**V**	**X**

1. Model and input voltage
DT12 - = LM80, 12 Vdc
DT24 - = LM80, 24 Vdc

2. Load torque capacity and screw type
T68M - = 250 N (56 lbf), trapezoidal screw
B61M - = 400 N (90 lbf), ball screw
B62M - = 180 N (40 lbf), ball screw
B65M - = 750 N (169 lbf), ball screw

3. Ordering stroke length
050 = 500 mm
060 = 600 mm
070 = 700 mm
080 = 800 mm
090 = 900 mm
100 = 1000 mm
110 = 1100 mm
120 = 1200 mm
130 = 1300 mm
140 = 1400 mm
150 = 1500 mm

. Motor orientation
A = 0° (standard)
B = 60°
C = 120°
D = 180°
F = 300°

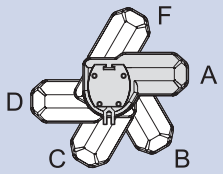

5. Motor enclosure
C = with enclosure (IP44)
U = no enclosure (IP33)

6. Mounting orientation and spline safety feature
V = vertical with motor down, without spline safety feature
F = vertical with motor down, with spline safety feature

7. Options
X = no option
H = manual override [1]

(1) Manual override dimensions

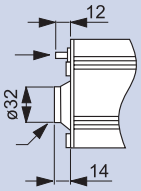

Hexagon socket with plastic cover (4 mm Allen key included)

LM80-V – Accessories

T-slot Mounting Kit

Designation	Part Number
M8 T-slot mounting kit	D680507

The T-slot mounting kit consists of four T-slot bolts, washers and nuts that fit in to the T-slot running along the profile. The T-slot mounting kit can be used to mount the unit or/and for attaching other components to the profile.

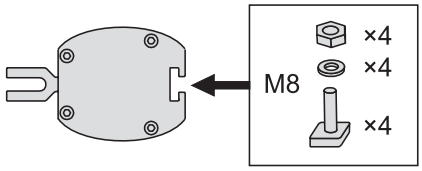

LM80-V – Electrical Connections

Without Option (standard)	
Actuator supply voltage [Vdc]	
DT12	12
DT24	24

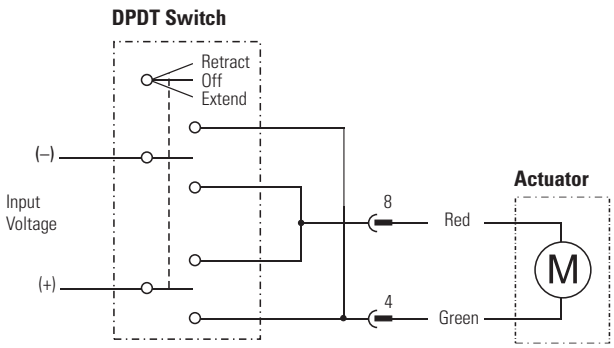

Connector pin configuration (front view)

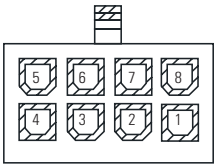

Connect the green lead (connector pin 4) to positive and red (pin 8) to negative to extend the actuator. Change polarity to retract the actuator.

Glossary

Acme Screw
Acme screws are self-locking and will not back-drive. They also withstand vibration and shock better than ball or worm screws and are used for applications with these characteristics. Also see “lead screw”.

Actuator Housing
The actuator housing provides environmental protection for the internal components and may also be a structural member of the actuator.

Adapters
The front and rear adapters are the connection points for mounting most Thomson actuators. The front adapter is usually a cross hole but optionally may be a tapped hole, threaded rod, or universal rod end. The rear adapter may be cast into the actuator housing or held in place with a nut.

Adjustable End of Stroke Limit Switches
The adjustable end of stroke limit switches may be moved to positions inside the full stroke of the actuator and will shut off the actuator when it reaches the limit switch. Also see “end of stroke limit switches”.

Anti-coast Brake/Electrical Brake
Depending on the load, AC ball screw actuators may coast to a stop when power is removed. This overrun is eliminated by an anti-coast brake or an electrical brake. The anti-coast brake (pawl type) will allow up to one revolution of the motor after power is removed. They are used on the Electrak GX AC. An electrical brake (electrically released) operates much faster after power is removed and allow less coast than the pawl type. Also see “brake”.

Anti-rotation Mechanism
A feature available on some actuators that resolves the restraining torque within the actuator. The extension tube will not rotate on actuators with this feature when driven without having the ends fixed.

Auto Reset Thermal Switch
An auto reset thermal will switch off the motor if it becomes too warm which means that the motor has exceeded its maximum allowed duty cycle. When the motor has cooled off, the switch will close again automatically, and the motor will start to run if power is still being applied to it. Also see “duty cycle”.

Ball Screw
Ball screws are highly efficient and are used for high loads and speeds. Also see “lead screw”.

Brake
Actuators using an acme or worm screw are inherently self-locking, while ball screw driven actuators are not. To prevent ball screw actuators from backdriving, they incorporate an anti backdriving brake (holding brake). Ball screw actuators with an AC motor can also be equipped with an anti-coast brake. Also see “Anti-coast brake/ electrical brake” and “holding brake”.

Capacitor
AC actuators use permanent split capacitor motors and require the use of a start/run capacitor in the control circuit to operate. The controls for AC actuators have the capacitor included in the control. For customer supplied controls, a separate capacitor is required, and the part number is included on the actuator product page.

CE Compliance and Certification
All actuators sold in the EU are CE compliant, while some actuators sold outside of the EU may not be. If you order your actuator outside of the EU and need a CE compliance, contact the factory to verify availability and be sure to include the request on your order. Most AC actuators are UL listed as standard. UL has no standard for DC actuators under 48 Vdc.

Compression Loads
See “Tension and Compression Loads”.

Controls
Controls can be external to the actuator and provide the actuator with the correct voltage, have either membrane or pendant operators, and some have position indicators.

Cover Tube
The cover tube provides protection for the lead screw and provides protection and support for the extension tube. For the Electrak® PPA, the cover tube also provides the rear mounting connection.

Customization
Even the most versatile actuator may not always suit all applications. But whatever your need is, our engineers are ready to help you to customize the actuators according to your requirements. We build more exclusive actuators than anyone else and have decades of experience in producing actuators to meet special needs.

Duty Cycle

$$\text{Duty cycle} = \frac{\text{on time}}{(\text{on time} + \text{off time})}$$

Example: 15 seconds on, 45 seconds off

$$\frac{15\ \text{s}}{(15\ \text{s} + 45\ \text{s})} = 25\%\ \text{duty cycle}$$

The duty cycle is a function of the maximum rated load and the ambient temperature. Ambient temperatures above the stated will affect the duty cycle negatively, while lower temperatures and/or lower load will affect it positively. Also see "on-time".

Dynamic Load

The dynamic load rating is how much load the actuator will move when power is applied. Also see "load rating".

Dynamic Braking

Dynamic braking is a feature which short circuits the motor windings at power off, resulting in a shorter coasting distance before the actuator comes to a complete stop. Dynamic braking can be accomplished on other DC actuators by wiring the control to short the motor leads when power is removed.

Electronic Limit Switches (ELS)

Electronic Limit Switches is a current sensing function used in some actuator control models. The ELS senses the current and if it exceeds a preset level, the control cuts the power to the motor. This function can be used to detect and stop at the ends of the actuator stroke or to stop the actuator if it runs into an obstacle.

Electronic Load Monitoring (ELM)

A built-in microprocessor inside the actuators continuously monitors the performance of the actuator. The microprocessor will stop the movement at the end of stroke, in case of mid stroke stall, at overload conditions or if the duty cycle is too high. It also eliminates the need of a clutch and provides dynamic braking.

Encoder Feedback

Encoders provide a digital output signal that can be used to determine the position of the extension tube. An encoder equipped actuator must return to a "home" position if power is removed and restored in order to reset its starting point. Also see "potentiometer feedback".

End of Stroke Limit Switches

End of stroke limit switches are incorporated in some actuator models, either as standard or as an option, that will shut off power when the end of stroke is achieved. Also see "fixed end of stroke limit switches" and "adjustable end of stroke limit switches".

End Play (Backlash)

The stack up of tolerances within the lead screw assembly and gearing allowing some linear movement of the extension tube without rotating the motor. Typical end play or backlash varies by model. The range is 0.3 to 2.0 mm (0.012 - 0.08 inch).

Extension Tube

The extension tube slides in and out of the actuator and is connected via the front adapter to the load being moved or positioned.

Fixed End of Stroke Limit Switches

The fixed end of stroke limit switches allow the full stroke of the actuator to be used and will shut off power when the end of stroke is achieved. Also see "end of stroke limit switches".

Holding Brake

All acme, worm or trapezoidal screw driven actuators are inherently self-locking, while ball screw driven ones incorporate an anti back-driving brake (holding brake) that engages when the actuator has come to a complete stop. Also see "brake".

Input Voltage

The nominal voltage required to operate the actuator. All actuators will accept at least a ± 10% variation of the nominal voltage, but a change in the voltage will result in a change of the speed of DC actuators. Controls are available that accept 115 or 230 Vac input and provide 24 Vdc output to operate 24 Vdc actuators.

Inrush Current

Inrush current is a short current peak that appears at the start of an actuator as the motor tries to get the load moving. Typically, the inrush current will last between 75 to 150 milliseconds and can be up to three times higher (on a low-level switched actuator 1.5 times higher) than the current for the actuator and load. Batteries have no problem delivering the inrush current, but if using an AC power supply, it is important to size it to handle the inrush current.

Installation Instructions

Each actuator has an installation manual to answer typical questions about mounting and wiring the actuators.

IP Rating

See "protection class".

Lead Screw

Actuators use four different types of lead screws depending on the configuration and load requirements of the actuator. Ball screws are highly efficient and used for high loads and speeds. Acme, worm and trapezoidal screws are self-locking and will not backdrive. Acme and trapezoidal screws withstand vibration and shock better than the other and are used for applications with these characteristics.

Glossary

Lifetime Expectancy
Life is very complex to calculate and depends on many parameters. Some of the more important parameters includes load, stroke length, operation temperature and how often the overload clutch is operated. Contact customer service for more information.

Lifting Columns
Lifting columns provide a stable base for adjusting the height of tables or platforms. The column provides both the lifting force and the ability to resolve high moment forces from off axis loads.

Linear Actuators
Actuators providing a linear thrust via an extension tube to lift, lower, push, pull or position a load.

Load Rating
The load rating is the minimum amount of force the actuator will provide during its lifetime. The load rating of all rod style actuators is the same for both compression and tension loads. Also see “dynamic load”, “static load” and “tension and compression load”.

Low Level Switching
Low level switching allows you to control the direction of the actuator motion by using low level inputs on the actuator instead of having to switch the much higher motor current.

Manual Override (Hand Wind)
Allows manual operation of the actuator in both directions in case of a power failure. The actuator accepts a standard hexagon key to rotate the motor in either direction. Optional on some models.

Maximum On Time
The maximum amount of time an actuator may operate without stopping to “cool off”. For high load and long stroke actuators, this may be one extend and retract cycle. The actuator should not exceed 25% duty cycle at full rated load. If no maximum on time is stated, the maximum on time is equal to one full cycle at the maximum dynamic load for the actuator in question.

Mounting
Electrak® actuators are quickly and easily mounted by slipping pins through the holes on each end of the unit and into brackets on the machine frame and the load. PPA actuators are mounted by the rear trunnions on the cover tube and the clevis on the extension tube. Solid pins provide maximum holding strength, and a retaining or cotter pin on each end will prevent the pin from falling out of its mounting bracket. Roll or spring type mounting pins should be avoided. The mounting pins must be parallel to each other as shown (Fig. a). Pins which are not parallel may cause the actuator to bind. The load should act along the axis of the actuator since off center loads may cause binding (Fig. b).

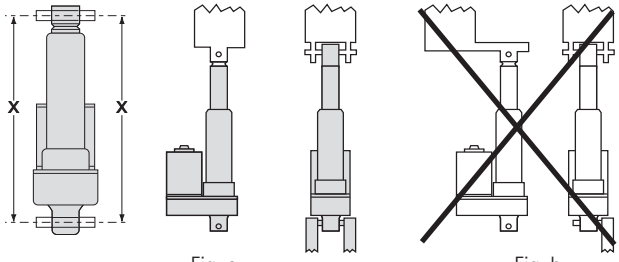

Fig. a Fig. b

Non-driven Actuators
Actuators supplied without a motor and driven manually or by a customer supplied motor.

On-time
The on-time is the time that the motor runs for between two stops. The maximum on-time is the maximum time the motor is allowed to run for between two stops. Sometimes the maximum on-time is the limiting factor rather than the duty cycle rating. Also see “duty cycle”.

Operating and Storage Temperature
The operating temperature is the range in which the actuator may be safely operated. For the high end of the range, the duty cycle will be lower than 25%. All actuators can be stored or transported at the same temperature as the operating temperature. Contact customer support if the operating temperature will be exceeded during storage or transportation.

Overload Clutch
Electrak 050, GX and PPA Series linear actuators are protected by a load limiting mechanical clutch which prevents the motor from stalling at either end of the actuator stroke. It will also slip when the factory-set load limit is exceeded. The clutch is a ball detent design, assuring a consistent slip point and long life.

Potentiometer Feedback
Potentiometers provide an analog output signal that can be used to determine the position of the extension tube. A potentiometer will “remember” its position if power is removed and restored. Also see “encoder feedback”

Protection Class (Ingress Protection)
The protection class refers to the environmental ingress protection rating of the enclosure. International Protection Marking (IP) ratings are commonly referenced standards that classify electrical equipment using standard tests to determine resistance to ingress of solid objects and liquids. The first digit applies to airborne contaminants and the second digit (and sometimes a third letter) to water/moisture.

IP33: protected against the penetration of solid objects with a diameter greater than 12 mm and against direct sprays of water up to 60 degrees from vertical.
IP44: protected against the penetration of solid objects with a diameter greater than 1 mm and against water sprayed from any direction.
IP45: protected against the penetration of solid objects with a diameter greater than 1 mm and low pressure water jets from any direction.
IP51: protected from dust and vertical dripping water/ condensation.
IP52: protected from dust and dripping water/condensation falling at an angle up to 15 degrees from vertical.
IP56: protected from dust and high pressure water jets from any direction.
IP65: dust tight and protected against low pressure water jets from any direction.
IP66: dust tight and protected against high pressure water jets from any direction.
IP67: dust tight and protected against the effect of immersion in water between 150 mm (5.9 inch) and 1 meter (39.4 inch).
IP69K: dust tight and protected against the effect of high pressure washing with hot water from any direction.

Pulse Width Modulation (PWM)

Pulse width modulation control works by switching the power supplied to the motor on and off rapidly. The DC voltage is converted to a square-wave signal, alternating between fully on and zero, giving the motor a series of power "kicks". If the switching frequency is high enough, the motor runs at a steady speed due to its fly-wheel momentum. By adjusting the duty cycle of the signal (modulating the width of the pulse, hence the 'PWM'), the time fraction it is "on", the average power can be varied, and hence the motor speed. Note: Actuators with built-in electronics and CE filters will be affected negatively by the PWM modulation and should not be used together. Contact customer support for more information.

REACH

REACH is a European Union regulation concerning the Registration, Evaluation, Authorization and restriction of Chemicals. It makes manufacturers and importers who place chemicals on the market responsible for understanding and managing the risks associated with their use.

Restraining Torque

The torque which is developed between the clevis on the extension tube and rear mount (clevis or trunnion) when the unit extends or retracts and ratchets the clutch (Fig. c). This means that if the ends are not fixed by a method that can handle the restraining torque, the extension tube will rotate instead of moving. However, units with anti-rotation mechanism are internally restrained and can therefore be run in and out without having to be fixed in the ends. Also see "anti-rotation mechanism".

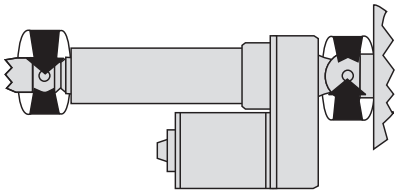

Fig. c

Rodless Actuators

Rodless actuators provide support for the load as well as thrust. The load is supported and moved by a carriage on the actuator rather than pushed or pulled by an extension rod. Rodless actuators are ideal for applications requiring long strokes (up to 1500 mm), high speeds (up to 110 mm/s), movement of the load within the shortest envelope possible or the load supported by the actuator.

RoHS Compliance

All actuators, controls and accessories sold in the EU are RoHS compliant unless otherwise stated, while products sold outside of the EU may not be. If you order an actuator outside of the EU and need it to be RoHS compliant, contact the factory to verify availability and be sure to include the request on your order.

Rotary Actuators

Actuators providing a rotary output to position a load, turn a winch, or rotate a gear or sprocket.

Service and Maintenance

Actuators are generally maintenance free. Electrak GX have repair kits available from your local distributor or OEM.

Side Loading

Side loading occurs when the extension tube/moving member is subjected to loads from the side. Most actuators cannot handle any side loads, and a proper design of the application should eliminate any side loads or keep it within the permissible limits.

Sizing and Selection

The Thomson web site (www.thomsonlinear.com) includes an online tool that can be used to walk through the decision process for picking the best actuator and get the ordering data for your choice.

Speed

DC actuators have a direct load/speed relationship. As the load increases, the speed decreases. There are curves on each product page to show the speed from no load to full rated load. AC actuators have little speed fluctuations based on load but there are load/speed curves on all the AC actuator product pages.

Glossary

Spline Safety Function
An optional safety function on the rodless actuator (LM80) that will stop downward motion in case the carriage (the moving member) collides with an obstacle. The motor will keep, running but the carriage will stand still and not pull down on the obstacle. When reversing the motor rotation, the carriage will automatically start to move upwards again.

Static Load
The static load rating is how much load the actuator will hold with power off. The static load rating is normally twice the dynamic load rating. Also see “load rating”. If nothing else is stated, the static load rating is for the actuator extension tube being fully retracted. The static load rating will decrease as the tube extends.

Synchronous Operation
Normally motor speed cannot be controlled with enough precision to ensure that the actuators will remain synchronized, and a binding effect could take place. However, there are some solutions. Non-driven actuators may be mechanically linked and thereby synchronized. Actuators equipped with an encoder can be synchronized using controls designed for synchronous operation as long as there is no onboard electronics preventing PWM operation. Electrak HD models with SYN option have a built in control which enables synchronized operation between two or more Electrak HD SYN units of the same type.

Tension and Compression Load
A tension load tries to stretch the actuator, and a compression load tries to compress the actuator (Fig. d). Most actuators can manage the same tension and compression load. Also see “load rating”. With bi-directional loads, the end play of the actuator extension tube may need to be taken into consideration when using the actuator for positioning tasks.

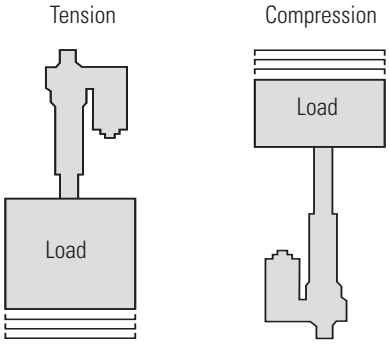

Fig. d

Trapezoidal Screw
Screw type with similar characteristics as an acme screw. This type of screw is used in LM80. Also see “acme screw” and “lead screw”.

Vent Tube
Electrak® 050 actuators have a breather tube in the wiring harness to allow the actuator to operate without creating a vacuum and drawing water through the seals on the cover tube.

Voltage Drop
Long leads/cables between the power source and the actuator will result in a voltage drop for DC units. This voltage drop can cause malfunction and are avoided by sizing the leads in accordance with the following lead cross section selection table. The table is based on an ambient temperature of 30 °C (86 °F) or less. A higher ambient temperature may result in the need for a greater lead cross section.

Lead Cross Section Selection Table [mm^2 (AWG)]

Current draw [A]	Cable length [m]	Actuator input voltage [Vdc]		
		12	24	36
0 - 10	0 - 3	2.5 (14)	1.5 (16)	1.5 (16)
	3 - 6	2.5 (14)	1.5 (16)	1.5 (16)
	6 - 10	1.5 (16)	2.5 (14)	1.5 (16)
10 - 15	0 - 3	2.5 (14)	2.5 (14)	1.5 (16)
	3 - 6	2.5 (14)	2.5 (14)	1.5 (16)
	6 - 10	2.5 (14)	-	-
15 - 20	0 - 3	2.5 (14)	-	-
	3 - 6	6 (12)	-	-
	6 - 10	2.5 (14)	-	-
20 - 28	0 - 3	6 (12)	-	-
	3 - 6	10 (8)	-	-
	6 - 10	6 (12)	-	-
28 - 35	0 - 3	6 (12)	-	-
	3 - 6	10 (8)	-	-
	6 - 10	10	-	-

Worm Screw
Worm screws are self-locking and will not back-drive. This type of screw is used in Electrak 050, Throttle and Max Jac. Also see “lead screw”.

Notes

Contact us or any of our 2000+ global distribution partners by scanning the code below
or visiting www.thomsonlinear.com/contact

RegalRexnord™

www.regalrexnord.com

www.thomsonlinear.com

Linear_Actuators_CTEN-0011-10 | 20260528TJ | MCC-12405-TL-EN-US 05/26
Specifications are subject to change without notice. It is the responsibility of the product user to determine the suitability of this product for a specific application. All trademarks property of their respective owners.
©2026 Thomson Industries, Inc. | 2400 Curtiss Street, Downers Grove, IL 60515 USA

THOMSON®